THIS DRAWING IS UNPUBLISHED. RELEASED FOR PUBLICATION -,- .
© COPYRIGHT - BY TYCO ELECTRONICS CORPORATION. ALL RIGHTS RESERVED.

LOC	DIST
CM	00

REVISIONS

P	LTR	DESCRIPTION	DATE	DWN	APVD
	N	REVISED PER 0G3B-1094-04	26JAN05	KW	SR

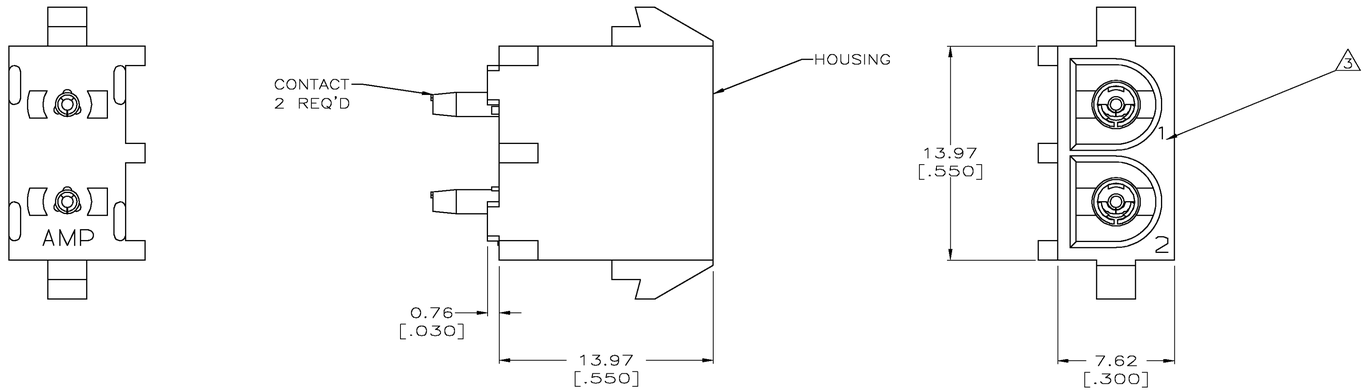

1. PARTS COMPLY TO AMP SOLDERABILITY SPECIFICATION 109-11-3.
2. CONTACT IS PLATED OVERALL WITH 0.00127 [.000050] NICKEL, THEN 0.00076 [.000030] GOLD OVER CONTACT LENGTH INDICATED AND MATTE TIN LEAD ON SOLDER TAIL END.
3. CIRCUIT IDENTIFICATION CHARACTERS ARE ADJACENT TO THE INDICATED CAVITIES, BUT LOCATION AND ORIENTATION MAY DIFFER FROM PRINT.
4. DIMENSIONS IN BRACKETS ARE IN INCHES.
5. CONTACT IS PLATED OVERALL WITH 0.00127 [.000050] NICKEL, THEN 0.00076 [.000030] GOLD OVER CONTACT LENGTH INDICATED AND MATTE TIN ON SOLDER TAIL END.

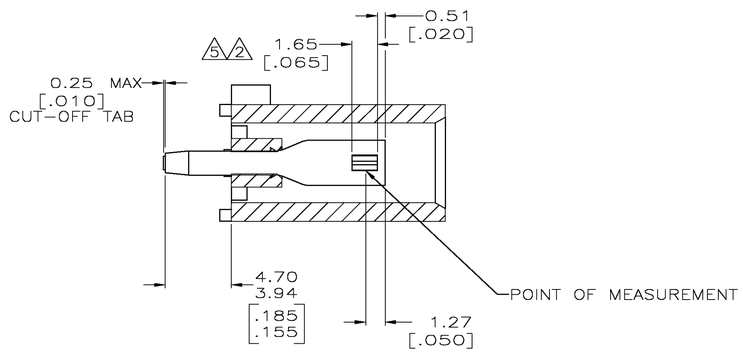

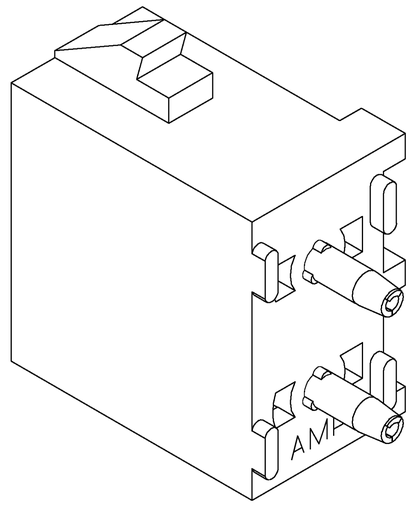

3-DIMENSIONAL MODEL
NTS

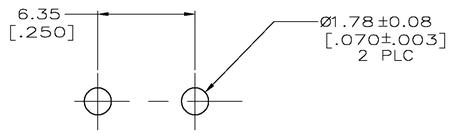

RECOMMENDED MOUNTING HOLE PATTERN
FOR 1.57 [.062] THICK P.C. BOARD

CONTACT MATERIAL AND FINISH	HOUSING MATERIAL	PART NUMBER
PHOSPHOR BRONZE, GOLD 5	NYLON,UL94V-0,WHITE	350824-4
PHOSPHOR BRONZE, GOLD 2	NYLON,UL94V-0,WHITE	350824-2
PHOSPHOR BRONZE, PRE-TIN	NYLON,UL94V-0,WHITE	350824-1

METRIC

THIS DRAWING IS A CONTROLLED DOCUMENT.

DIMENSIONS: mm [INCHES]

TOLERANCES UNLESS OTHERWISE SPECIFIED:
0 PLC ± -
1 PLC ± -
2 PLC ± 0.13 [.005]
3 PLC ± -
4 PLC ± -
ANGLES ± 0°30'

MATERIAL: SEE TABLE
FINISH: SEE TABLE

DWN B. LEWIS 8-19-98
CHK R. SWING 8-19-98
APVD M. TRULL 8-19-98
PRODUCT SPEC —
APPLICATION SPEC —
WEIGHT —

Tyco Electronics Corporation
Greensboro, NC 27409

NAME: SOCKET HEADER ASSEMBLY, 2 CIRCUIT UNIVERSAL MATE-N-LOK ™

SIZE	CAGE CODE	DRAWING NO	RESTRICTED TO
A1	00779	C-350824	—

CUSTOMER DRAWING
SCALE 5:1 SHEET 1 OF 1 REV N