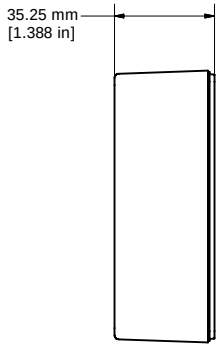

SIDE VIEW OF BOX

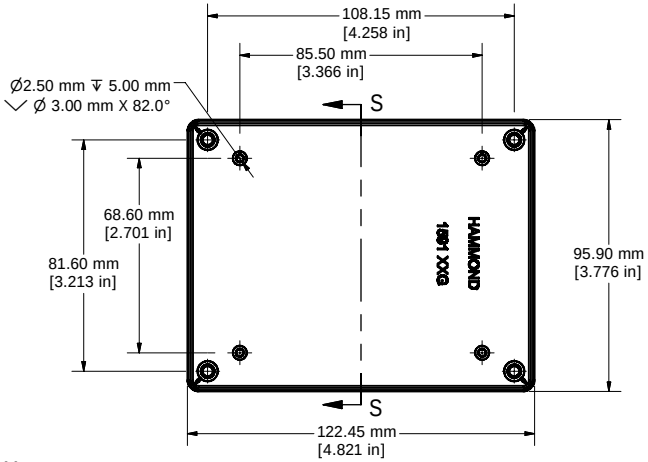

TOP VIEW OF BOX

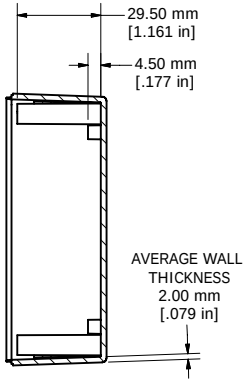

SECTION S-S

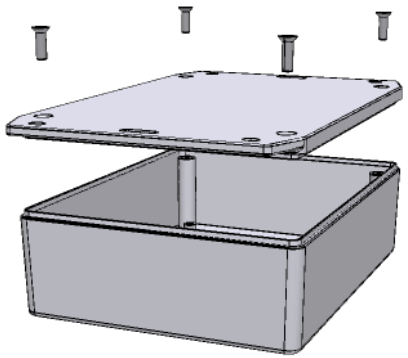

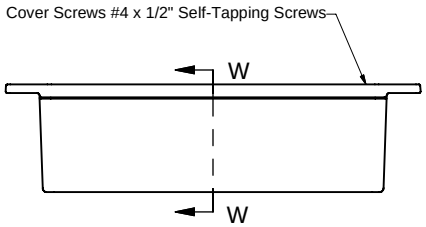

SIDE VIEW OF ENCLOSURE

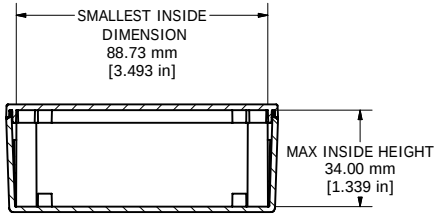

SECTION W-W

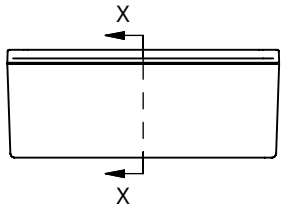

END VIEW OF ENCLOSURE

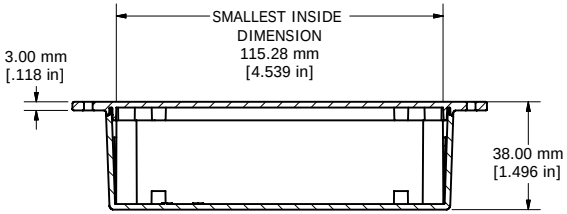

SECTION X-X

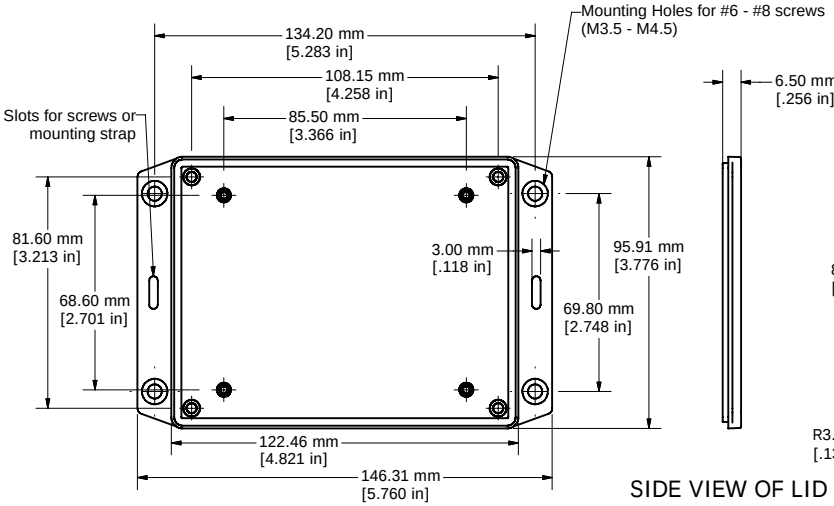

BOTTOM VIEW OF LID

SIDE VIEW OF LID

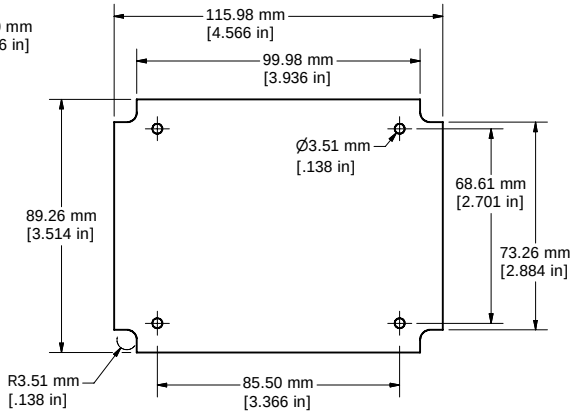

MAX PC BOARD SIZE (NOT INCLUDED)

Enclosures can be Factory Modified (Milling, Drilling, Printing etc.)
Solid models of this enclosure available in STEP or IGES.
Contact Factory mjm@hammondmfg.com

NOTE	
Enclosure molded from GRABS UL 94-HB Plastic.	
No Brass Inserts Included	
Other materials / colours available consult factory.	
1591XXGSFL	
1591XXGSFL Box Enclosure	
Black Enclosure - RAL 7011	1591XXGSFLBK
Gray Enclosure - RAL 7035	1591XXGSFLGY
ACCESSORIES	
Lid Screws self-tapping Black	1591TS100BK (Pkg 100)
Lid Screws self-tapping Standard	1591TS100 (Pkg 100)
P.C. Board Screws (All Boxes)	
P.C. Board Screws	1593ATS50 (Pkg 50)
[#4 x 1/4" self-tapping (6.4mm)]	1593ATS100 (Pkg 100)

HAMMOND MANUFACTURING™

1591XXGSFL

www.hammondmfg.com