Product Data Sheet

10mm 2-Way Divider

John Guest

Applications	
Pneumatics	✓
Drinks Dispense	✓
Pure Water	✓

The John Guest 10mm 2-Way Divider has been developed for a wide range of applications involving foodstuffs, potable liquids and air.

Working Temperatures and Pressures:

10 Bar max
-20°C to 70°C

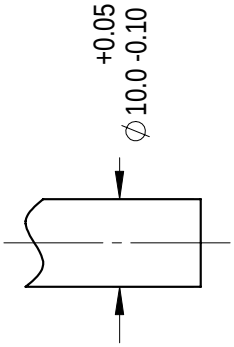

Tube Detail

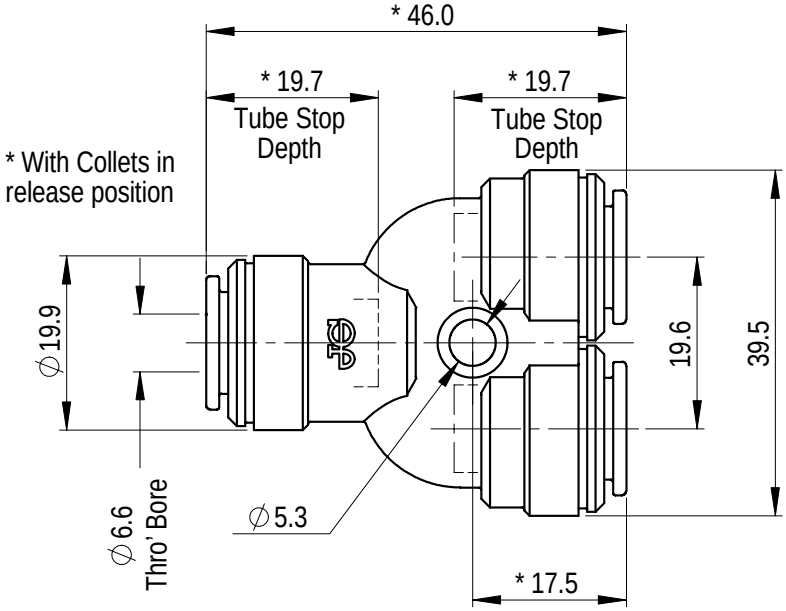

Part Description	Material
Body	Acetal Copolymer (Unfilled), Black
Collet	Acetal Copolymer (Unfilled), Black / Stainless Steel
'O' Rings	Nitrile, Black

All Dimensions in mm

ECN15228

THE COPYRIGHT IN THIS DRAWING AND THE PRODUCTS REFERRED THEREON BELONG TO JOHN GUEST INTERNATIONAL LIMITED AND THIS DRAWING NOR THE INFORMATION CONTAINED HEREIN SHALL BE PRODUCED IN ANY FORM OR USED FOR ANY PURPOSE WITHOUT WRITTEN CONSENT © 2004

The company has a policy of continuous research and development and reserves the right to amend without notice the specification and design of all products illustrated. For details of terms and conditions and any other technical enquiries, please contact our Customer Services department.

ISSUE 1 18-03-04

DS-PM2310E

ECN15228
ISSUE RAISED FOR RELEASE

ISSUE	DATE DRAWN	DATE ISS.	DRN. BY	ISS. BY	ECN	CHECKED	APPROVED
0A	03-03-04	03-03-04	KLO	KLO	15128	SMD	SMD
1	18-03-04	18-03-04	KLO	KLO	15228	SMD	SMD

DATA SHEET No.	**DS-PM2310E**
TITLE	**10mm 2-Way Divider**

ISSUE 1 18-03-04

DS-PM2310E