EN

Professionally approved products.

Datasheet

Dimmable Constant Voltage LED Driver 40.1W 24V 1.67A RS HLN-40H-24A

RS Stock number 738-2166

■ Features :

- Universal AC input / Full range (up to 305VAC)
- Built-in active PFC function
- Protections: Short circuit / Overload / Over voltage / Over temperature
- Cooling by free air convection
- OCP point adjustable through output cable or internal potential meter
- IP64 design for indoor or outdoor installations
- Three in one dimming function (1~10Vdc or PWM signal or resistance)
- Suitable for LED lighting and moving sign applications
- Compliance to worldwide safety regulations for lighting
- Suitable for dry / damp location or outdoor application

RS, Professionally Approved Products, gives you professional quality parts across all products categories. Our range has been testified by engineers as giving comparable quality to that of the leading brands without paying a premium price.

EN

Professionally approved products.

Datasheet

SPECIFICATION

MODEL		HLN-40H-12 ☐	HLN-40H-15 ☐	HLN-40H-20 ☐	HLN-40H-24 ☐	HLN-40H-30 ☐	HLN-40H-36 ☐	HLN-40H-42 ☐	HLN-40H-48 ☐	HLN-40H-54 ☐
OUTPUT	DC VOLTAGE	12V	15V	20V	24V	30V	36V	42V	48V	54V
	CONSTANT CURRENT REGION Note.4	7.2 ~ 12V	9 ~ 15V	12 ~ 20V	14.4 ~ 24V	18 ~ 30V	21.6 ~ 36V	25.2 ~ 42V	28.8 ~ 48V	32.4 ~ 54V
	RATED CURRENT	3.33A	2.67A	2A	1.67A	1.34A	1.12A	0.96A	0.84A	0.75A
	RATED POWER	40W	40W	40W	40.1W	40.2W	40.3W	40.3W	40.3W	40.5W
	RIPPLE & NOISE (max.) Note.2	150mVp-p	150mVp-p	150mVp-p	150mVp-p	200mVp-p	200mVp-p	300mVp-p	300mVp-p	300mVp-p
	VOLTAGE ADJ. RANGE Note.6	10.8 ~ 13.5V	13.5 ~ 17V	17 ~ 22V	22 ~ 27V	27 ~ 33V	33 ~ 40V	40 ~ 46V	44 ~ 53V	49 ~ 58V
	CURRENT ADJ. RANGE	Can be adjusted by internal potential meter or through output cable								
		2 ~ 3.33A	1.6 ~ 2.67A	1.2 ~ 2A	1 ~ 1.67A	0.8 ~ 1.34A	0.67 ~ 1.12A	0.58 ~ 0.96A	0.5 ~ 0.84A	0.45 ~ 0.75A
	VOLTAGE TOLERANCE Note.3	±2.5%	±2.0%	±1.0%	±1.0%	±1.0%	±1.0%	±1.0%	±1.0%	±1.0%
	LINE REGULATION	±0.5%	±0.5%	±0.5%	±0.5%	±0.5%	±0.5%	±0.5%	±0.5%	±0.5%
	LOAD REGULATION	±2.0%	±1.5%	±1.0%	±0.5%	±0.5%	±0.5%	±0.5%	±0.5%	±0.5%
	SETUP, RISE TIME Note.7	1500ms, 80ms / 115VAC at full load 1000ms, 80ms / 230VAC at full load								
	HOLD UP TIME (Typ.)	16ms/230VAC 16ms/115VAC at full load								
INPUT	VOLTAGE RANGE Note.5	90 ~ 305VAC 127 ~ 431VDC								
	FREQUENCY RANGE	47 ~ 63Hz								
	POWER FACTOR (Typ.)	PF>0.97/115VAC, PF>0.95/230VAC, PF>0.92/277VAC at full load (Please refer to "Power Factor Characteristic" curve)								
	EFFICIENCY (Typ.)	87%	87%	88%	88.5%	89%	89%	90%	90%	90%
	AC CURRENT (Typ.)	0.43A / 115VAC 0.24A / 230VAC 0.23A / 277VAC								
	INRUSH CURRENT(Typ.)	COLD START 70A/230VAC								
	LEAKAGE CURRENT	<0.75mA / 277VAC								
PROTECTION	OVER CURRENT Note.4	95 ~ 108%								
		Protection type : Constant current limiting, recovers automatically after fault condition is removed								
	OVER VOLTAGE	12 ~ 21V	18 ~ 24V	23 ~ 30V	28 ~ 35V	35 ~ 43V	41 ~ 49V	48 ~ 58V	54 ~ 63V	59 ~ 66V
		Protection type : Shut down o/p voltage, re-power on to recover								
	OVER TEMPERATURE	70℃ ±10℃ (RTH2)								
		Protection type : Shut down o/p voltage, re-power on to recover								
ENVIRONMENT	WORKING TEMP.	-40 ~ +50℃ (Refer to "Derating Curve")								
	WORKING HUMIDITY	20 ~ 95% RH non-condensing								
	STORAGE TEMP., HUMIDITY	-40 ~ +80℃, 10 ~ 95% RH								
	TEMP. COEFFICIENT	±0.03%/℃ (0 ~ 40℃)								
	VIBRATION	10 ~ 500Hz, 2G 12min./1cycle, period for 72min. each along X, Y, Z axes								
SAFETY & EMC	SAFETY STANDARDS	UL8750, EN61347-1, EN61347-2-13 independent, IP64 approved ; Design refer to UL60950-1, TUV EN60950-1, EN60335-1								
	WITHSTAND VOLTAGE	I/P-O/P:3.75KVAC I/P-FG:1.88KVAC O/P-FG:0.5KVAC								
	ISOLATION RESISTANCE	I/P-O/P, I/P-FG, O/P-FG:100M Ohms / 500VDC / 25℃/ 70% RH								
	EMC EMISSION	Compliance to EN55015, EN61000-3-2 Class C (≧60% load) ; EN61000-3-3								
	EMC IMMUNITY	Compliance to EN61000-4-2,3,4,5,6,8,11; EN61547, EN55024, light industry level (surge 4KV), criteria A								
OTHERS	MTBF	336.5Khrs min. MIL-HDBK-217F (25℃)								
	DIMENSION	161*61.5*35mm (L*W*H)								
	PACKING	0.35Kg;40pcs/15Kg/1.36CUFT								

RS, Professionally Approved Products, gives you professional quality parts across all products categories. Our range has been testified by engineers as giving comparable quality to that of the leading brands without paying a premium price.

Professionally approved products.

Datasheet

■ Mechanical Specification

Case No.HLN-60A Unit:mm

A Type:(HLN-40H-_A)

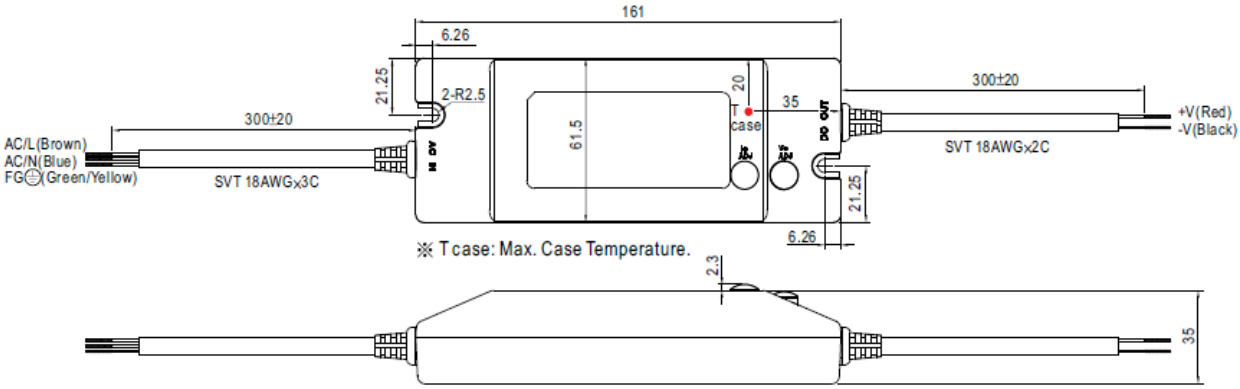

※IP64 rated. Output voltage and constant current level can be adjusted through internal potential meter.
(can access by removing the rubber stopper on the case).

B Type:(HLN-40H-_B)

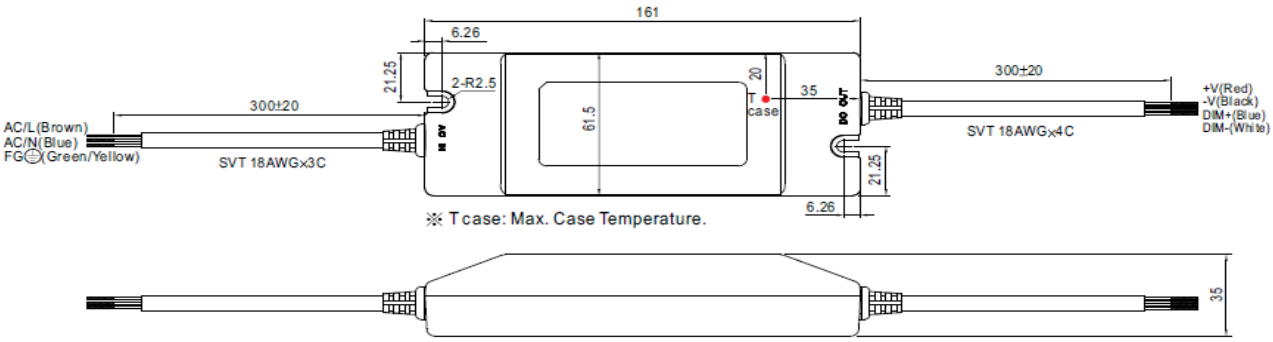

■ Block Diagram

fosc : 100KHz

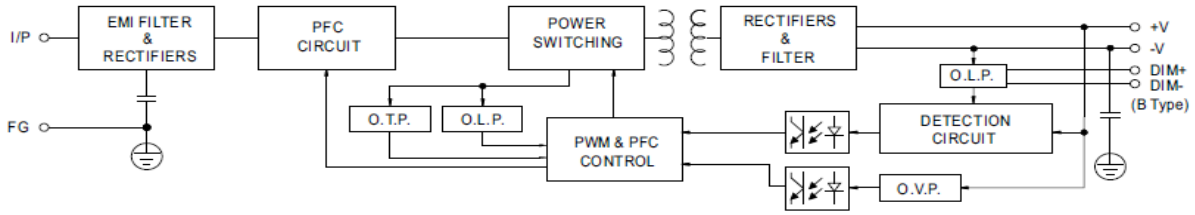

RS, Professionally Approved Products, gives you professional quality parts across all products categories. Our range has been testified by engineers as giving comparable quality to that of the leading brands without paying a premium price.

Professionally approved products.

Datasheet

■ Derating Curve

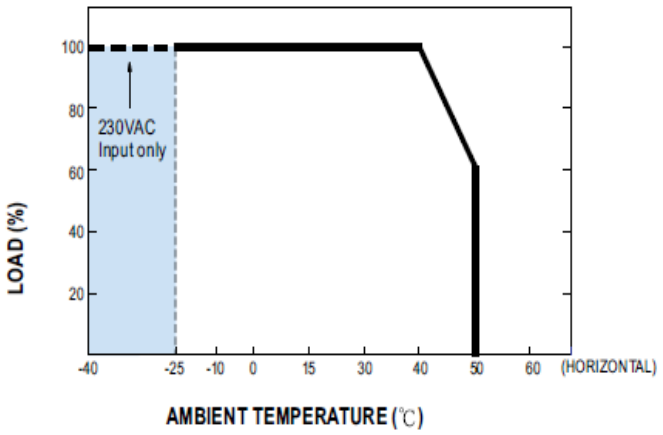

■ Static Characteristics

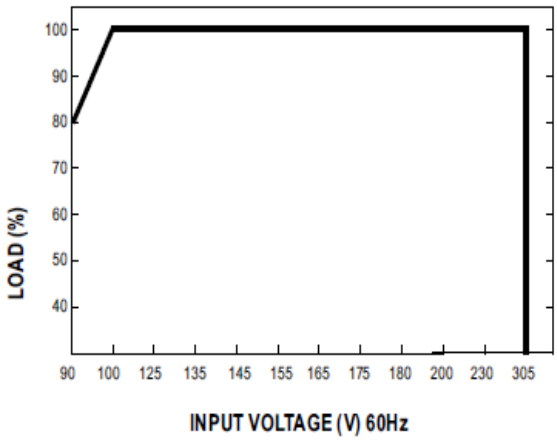

■ Power Factor Characteristic

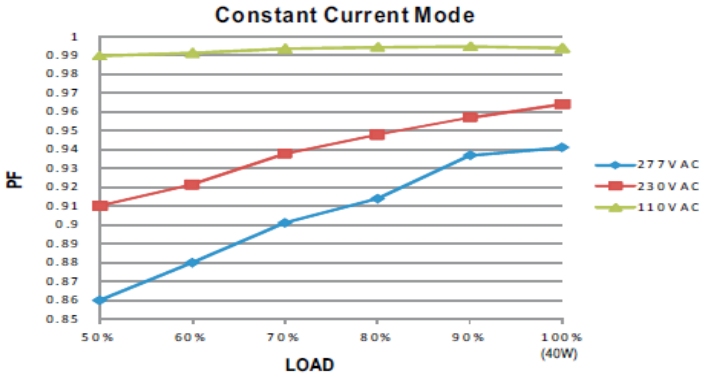

■ EFFICIENCY vs LOAD (48V Model)

HLN-40H series possess superior working efficiency that up to 90% can be reached in field applications.

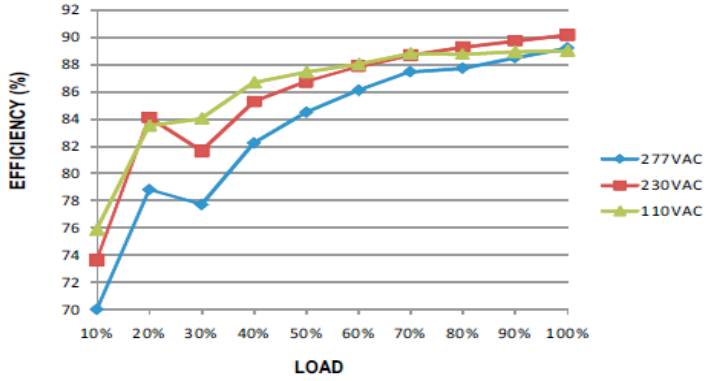

RS, Professionally Approved Products, gives you professional quality parts across all products categories. Our range has been testified by engineers as giving comparable quality to that of the leading brands without paying a premium price.

Professionally approved products.

Datasheet

■ DRIVING METHODS OF LED MODULE

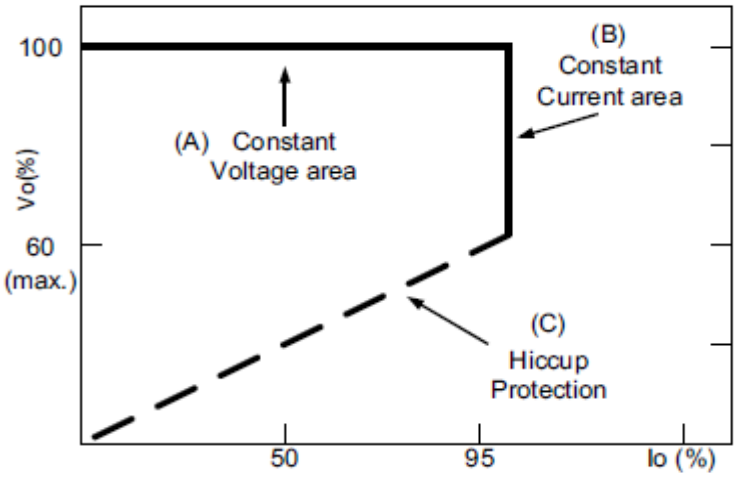

Typical LED power supply I-V curve

■ DIMMING OPERATION(for B-type only)

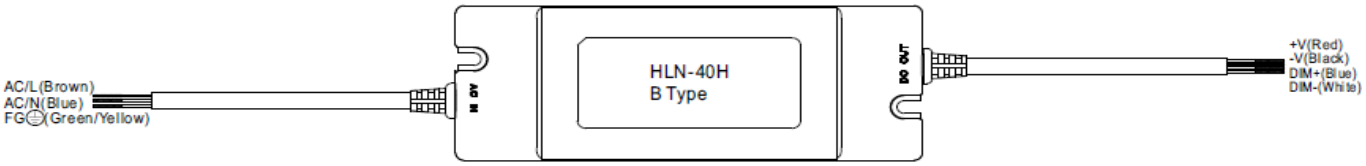

※ Vo and Io can not be adjusted (B type)

※ Built-in 3 in 1 dimming function, IP64 rated. Output constant current level can be adjusted through output cable by connecting a resistance or 1 ~ 10Vdc or 10V PWM signal between DIM+ and DIM-.

※ Please DO NOT connect "DIM-" to "-V".

※ Reference resistance value for output current adjustment (Typical)

Resistance value	Single driver	10KΩ	20KΩ	30KΩ	40KΩ	50KΩ	60KΩ	70KΩ	80KΩ	90KΩ	100KΩ	OPEN
	Multiple drivers (N=driver quantity for synchronized dimming operation)	10KΩ/N	20KΩ/N	30KΩ/N	40KΩ/N	50KΩ/N	60KΩ/N	70KΩ/N	80KΩ/N	90KΩ/N	100KΩ/N	-----
Percentage of rated current		10%	20%	30%	40%	50%	60%	70%	80%	90%	100%	95%~105%

※ 1 ~ 10V dimming function for output current adjustment (Typical)

Dimming value	1V	2V	3V	4V	5V	6V	7V	8V	9V	10V	OPEN
Percentage of rated current	10%	20%	30%	40%	50%	60%	70%	80%	90%	100%	95%~105%

※ 10V PWM signal for output current adjustment (Typical): Frequency range:100Hz ~ 3KHz

Duty value	10%	20%	30%	40%	50%	60%	70%	80%	90%	100%	OPEN
Percentage of rated current	10%	20%	30%	40%	50%	60%	70%	80%	90%	100%	95%~105%

RS, Professionally Approved Products, gives you professional quality parts across all products categories. Our range has been testified by engineers as giving comparable quality to that of the leading brands without paying a premium price.

Professionally approved products.

Datasheet

※Using the built-in dimming function on B-type model can't turn the lighting fixture totally dark. Please refer to the connection method below to achieve 0% brightness of the lighting fixture connecting to the LED power supply unit.

Dimming connection diagram for turning the lighting fixture ON/OFF :

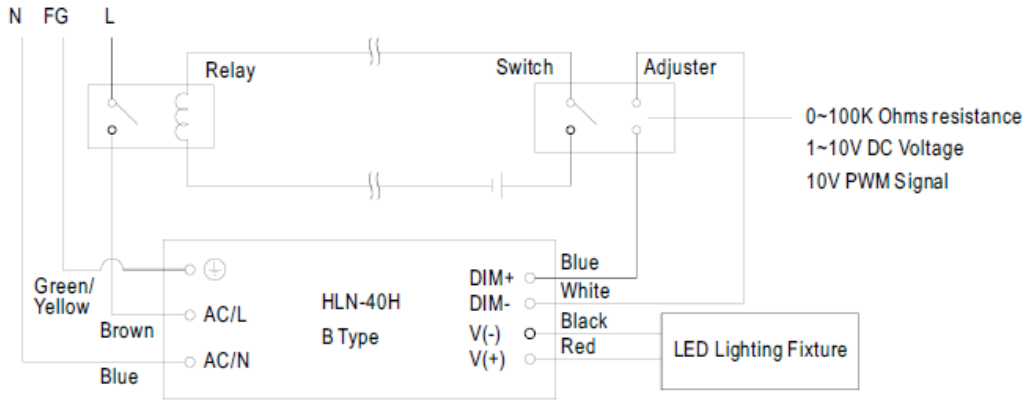

Using a switch and relay can turn ON/OFF the lighting fixture.

1. Output constant current level can be adjusted through output cable by connecting a resistor or 1~10Vdc or 10V PWM signal between DIM+ and DIM-.
2. The LED lighting fixture can be turned ON/OFF by the switch.

RS, Professionally Approved Products, gives you professional quality parts across all products categories. Our range has been testified by engineers as giving comparable quality to that of the leading brands without paying a premium price.