NUMBER 179958

METRIC

三角法(3rd ANGLE PROJECTION)

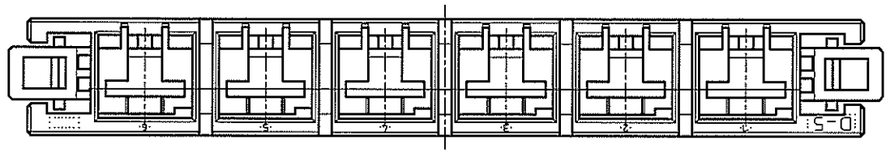

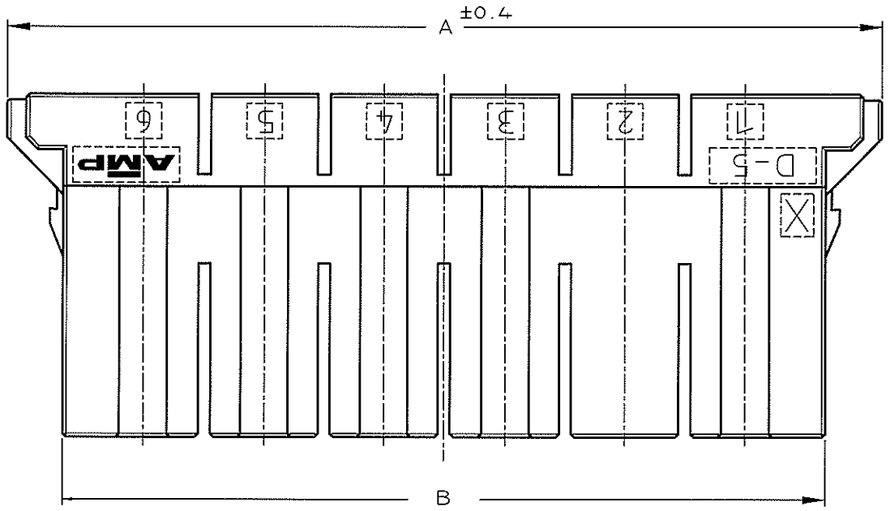

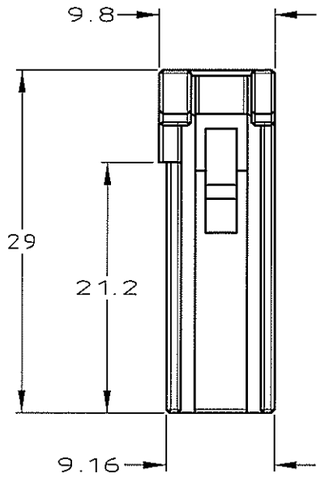

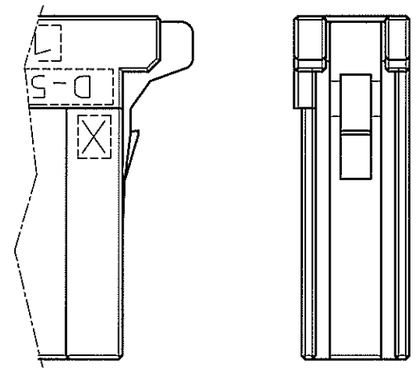

2P,3P ONLY

AS SHOWN
1-179958-6
(KEYING CODE:X)

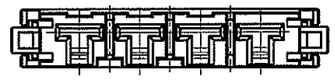

1-179958-4
(KEYING CODE:X)

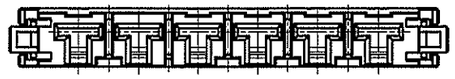

2-179958-6
(KEYING CODE:Y)

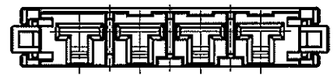

2-179958-4
(KEYING CODE:Y)

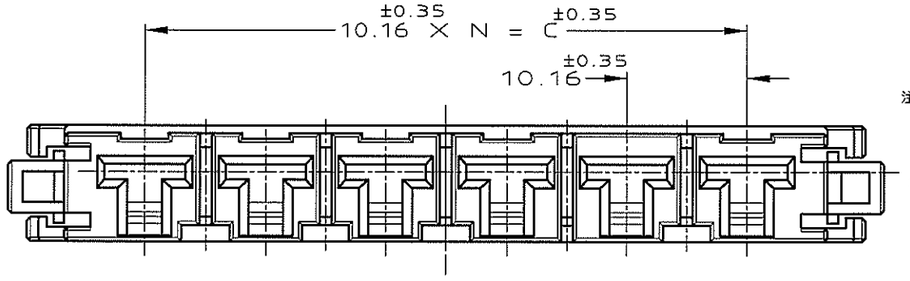

1-179958-6
(KEYING CODE:X)

注 記

1. 材料: ハウジング: ガラス入り熱可塑性 ポリエステル樹脂 (94V-0),色: 黒
2. ~~ハウジング全面にテフロン塗装のこと~~
3. 製品規格 :108-5453

NOTES

1. MATERIAL:HOUSING:GLASS FILED THERMO PLASTIC ,POLYESTER(94V-0),COLOR:BLACK
2. ~~TO COAT ALL SURFACE OF HOUSING WITH TEFLON~~
3. PRODUCT SPEC :108-5453

	FINISH	C	B	A	N	POS	P/N
							2-179958-6
		50.8	64.4	74	5	6	1-179958-6
OBSOLETE	2						~~5-179958-4~~
							2-179958-4
		30.48	44.08	53.68	3	4	1-179958-4
OBSOLETE	2						~~5-179958-3~~
							2-179958-3
		20.32	33.92	45.92	2	3	1-179958-3
							2-179958-2
		10.16	23.76	35.76	1	2	1-179958-2

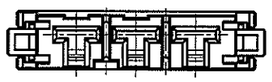

1-179958-3
(KEYING CODE:X)

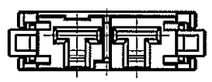

1-179958-2
(KEYING CODE:X)

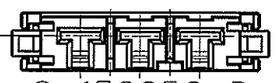

2-179958-3
(KEYING CODE:Y)

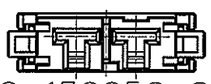

2-179958-2
(KEYING CODE:Y)

LTR	変更 (REVISION RECORD)	DR	CHK	DATE
E1	OBSOLETE P/N. ECR-08-006764	Y.Y	D.M	14MAR 2008
E	REVISED (FJ00-0108-04)	T.S	D.M	29MAR '04
D1	ADD P/N. (FJ00-1259-00)	D.M	S.M	11/OCT '00
D	REVISED (FJ00-1335-97)	K.I	I.H	5/SEP '97
C	REVISED (FJ00-5532-96)	K.I	Y.I	7/JAN '97
B	REVISED (FJ00-4330-96)	K.I	Y.I	16/MAY '96
A	REVISED (FJ00-4184-96)	K.I	Y.I	22/FEB '96
0	RELEASED (FJ00-1832-94)	Y.I	S.M	23/MAR '95

Copyright ©19 95年
タイコ・エレクトロニクス・アンプ株式会社

Copyright ©1995
Tyco Electronics AMP K.K.
ALL RIGHTS RESERVED.

Tyco Electronics Corporation
Kawasaki, Japan

絶縁外径(INSULATION DIA.) ZIR mmφ	名称(NAME) 1列 リセ ハウジング SINGLE ROW REC HSG <DYNAMIC D-5200S>		
仕上(FINISH) ZFN	一般公差 (GENERAL TOLERANCE) 10以下 ±0.2; 10を超え 30以下 ±0.25; 30を超え100以下 ±0.3; 角度 ±3°	A3 / LOC J	番号(No.) C-179958
DE. 22/MAR/'95 Y.Ishikawa		尺度(SCALE) 2-1	REV. E1
APP. 23/MAR/'95 S.MANABE			SHEET 1 OF 1

圧着端子 (WIRE RANGE) ZWR ~~mm²~~ (AWG -)	
材料(MATERIAL) 1	
DR. 22/MAR/'95 Y.Ishikawa	
CHK. 23/MAR/'95 S.MANABE	

単位・特 DIMENSIONS IN MM. DO NOT SCALE PRINT

PRINT DIST

AMP-J010-2C
REV.3/'93

(CUSTOMER DRAWING) 顧客用図面