PART NUMBER	ENGINEERING NUMBER	FINISH LENGTH
1300060422	103001A01F030	3.00′ +1.75″ -0 [.9M +44.5 -0]
1300060426	103001A01F060	6.00′ +2.19″ -0 [1.8M +55.6 -0]
1300060430	103001A01F120	12.00′ +3.50″ -0 [3.7M +88.9 -0]
1300060433	103001A01F150	15.00′ +6.50″ -0 [4.6M +165.1 -0]
1300060436	103001A01F200	20.00′ +6.50″ -0 [6.1M +165.1 -0]
1300060440	103001A01F250	25.00′ +12.50″ -0 [7.6M +317.5 -0]
1300060442	103001A01F300	30.00′ +12.50″ -0 [9.1M +317.5 -0]

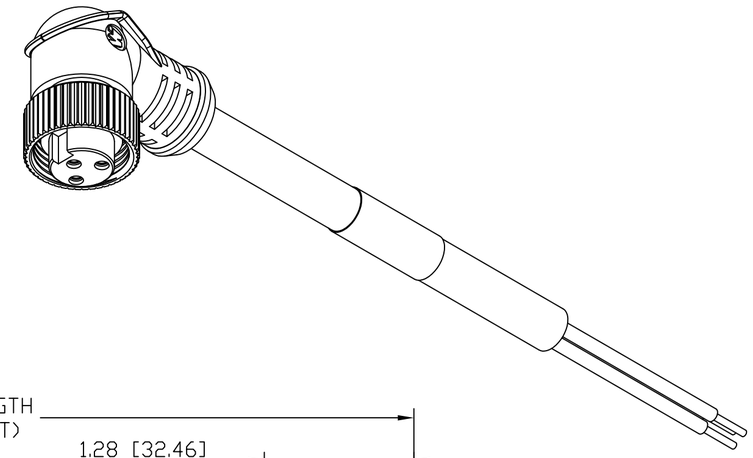

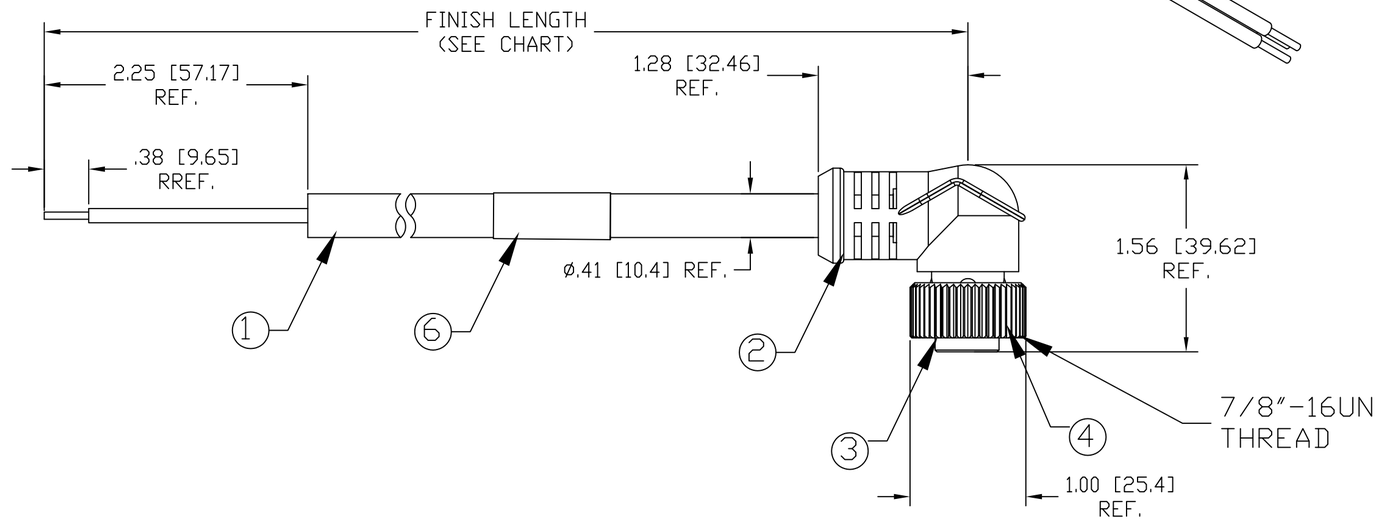

NOTE

1) MATERIAL: SEE TABLE

2) FINISHES: SEE TABLE

3) WRAP LABEL IS MARKED WITH P/N, DATE CODE, VOLTAGE & AMPERAGE

4) MATES WITH: MINI CHANGE, 3 POLE RECEPTACLE

5) ELECTRICAL DATA:
INLINE CORDSET
FEMALE A-SIZE WITH FLYING LEADS
16AWG UNSHIELDED
POLES: 3
MAX. VOLTAGE: 600V
MAX. CURRENT 13A
PROTECTION IP67
TEMPERATURE RANGE: -20°C TO 105°C

6) PACKAGING:
CABLE ASSEMBLIES ARE BAGGED SEPERATELY
IN POLY BAGS WITH BAR CODE LABEL ATTACHED
TO OUTSIDE OF BAG.

7)ASSEMBLY IS RoHS COMPLIANT.

8)CERTIFICATION
UL RECOGNIZED, FILE NO. E152210
CSA CERTIFIED, FILE NO. LR6837

FEMALE
FACE VIEW

P1

1	GREEN/YELLOW-GND
2	BLACK
3	WHITE

WIRING DIAGRAM

ITEM	QTY.	DESCRIPTION	MATERIAL	FINISH
6	1	LABEL	PLASTIC FILM	BLACK/YELLOW
5	3	CONTACT SOCKET	COPPER ALLOY	GOLD PLATED
4	1	INSERT	PVC	YELLOW
3	1	COUPLING NUT	ZINC DIE CAST	BLACK E-COATED
2	1	OVERMOLD	PVC	YELLOW
1	1	CABLE, 16AWG-3 TYPE STOOW	PVC	YELLOW

RELEASE
EC NO: WNA2010-0397
DRWN: BWOODMAN 12/22/09
CH'KD: --- ---
APPR: JFMURPHY 2010/01/05
DESCRIPTION
REV B

QUALITY SYMBOL
▼=0
Ⓒ=0

GENERAL TOLERANCES (UNLESS SPECIFIED)

	mm	INCH
4 PLACES	±----	±---
3 PLACES	±.005	±.005
2 PLACES	±.013	±.010
1 PLACE	±.025	±.020
ANGULAR ±1/2°		

DRAFT WHERE APPLICABLE MUST REMAIN WITHIN DIMENSIONS

DIMENSION STYLE: IN/MM
SCALE: 1:1
DESIGN UNITS: INCH
THIRD ANGLE PROJECTION

DRAWN BY: TWOLDEGE DATE: 2009/07/29
CHECKED BY: BWOODMAN DATE: 2009/07/29
APPROVED BY: JFMURPHY DATE: 2010/01/05

TITLE: MINI CHANGE ASSEMBLY 3-POLE FEMALE 90D 16/3AWG PVC

molex MOLEX INCORPORATED

MATERIAL NO.: SEE CHART
DOCUMENT NO.: SD-130006-015
SHEET NO.: 1 0F 1
SIZE: C

THIS DRAWING CONTAINS INFORMATION THAT IS PROPRIETARY TO MOLEX INCORPORATED AND SHOULD NOT BE USED WITHOUT WRITTEN PERMISSION