SSOP024-P-0300F

Unit: mm

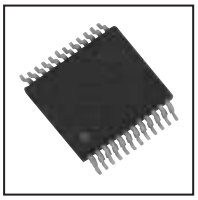

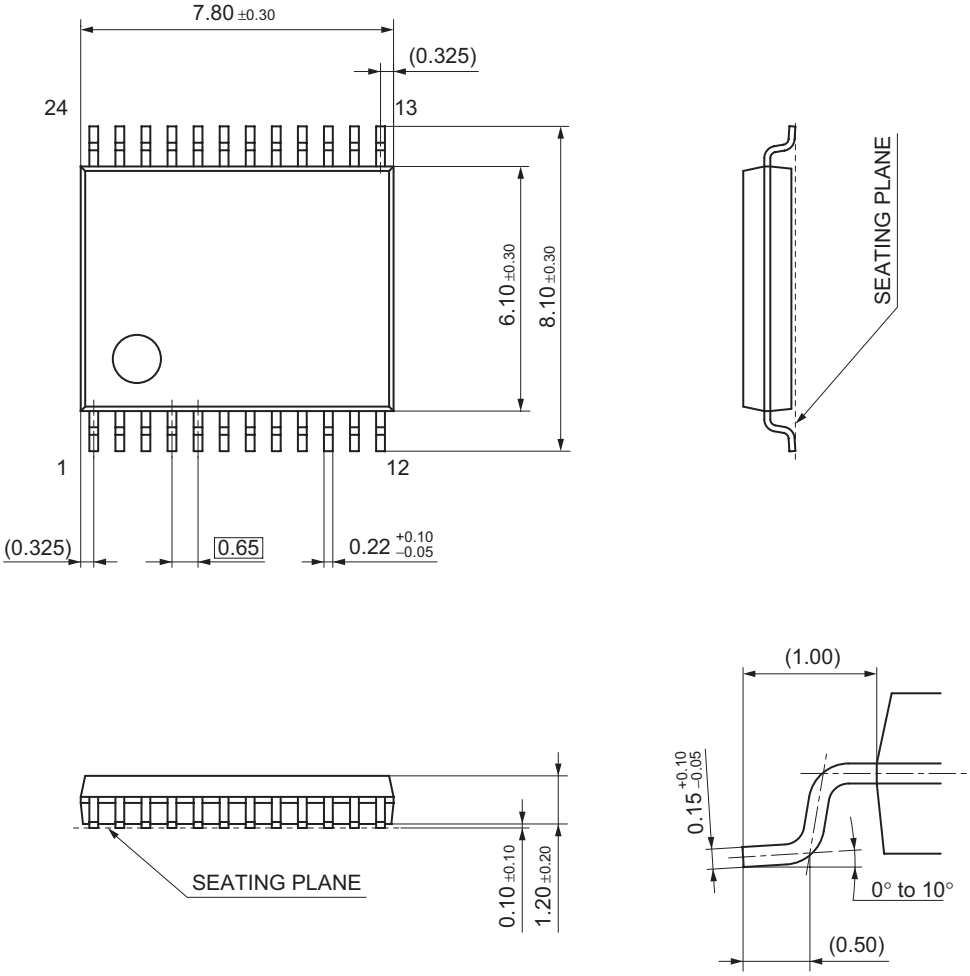

Panasonic Corporation