THIS DRAWING IS UNPUBLISHED. RELEASED FOR PUBLICATION -,- .
© COPYRIGHT - BY TYCO ELECTRONICS CORPORATION. ALL INTERNATIONAL RIGHTS RESERVED.

LOC	DIST
G	14

REVISIONS

P	LTR	DESCRIPTION	DATE	DWN	APVD
	G1	REVISED PER ECR-09-017960	27AUG09	HMR	JR

1 FOR 3.81 [.150] TO 5.84 [.230] WIRE INSULATION DIA

2 TONGUE MATERIAL THK: 1.02±0.05 [.040±.002]

3 APPLIES FROM THE METAL EDGE OF THE BARREL TO THE CENTER OF THE STUD

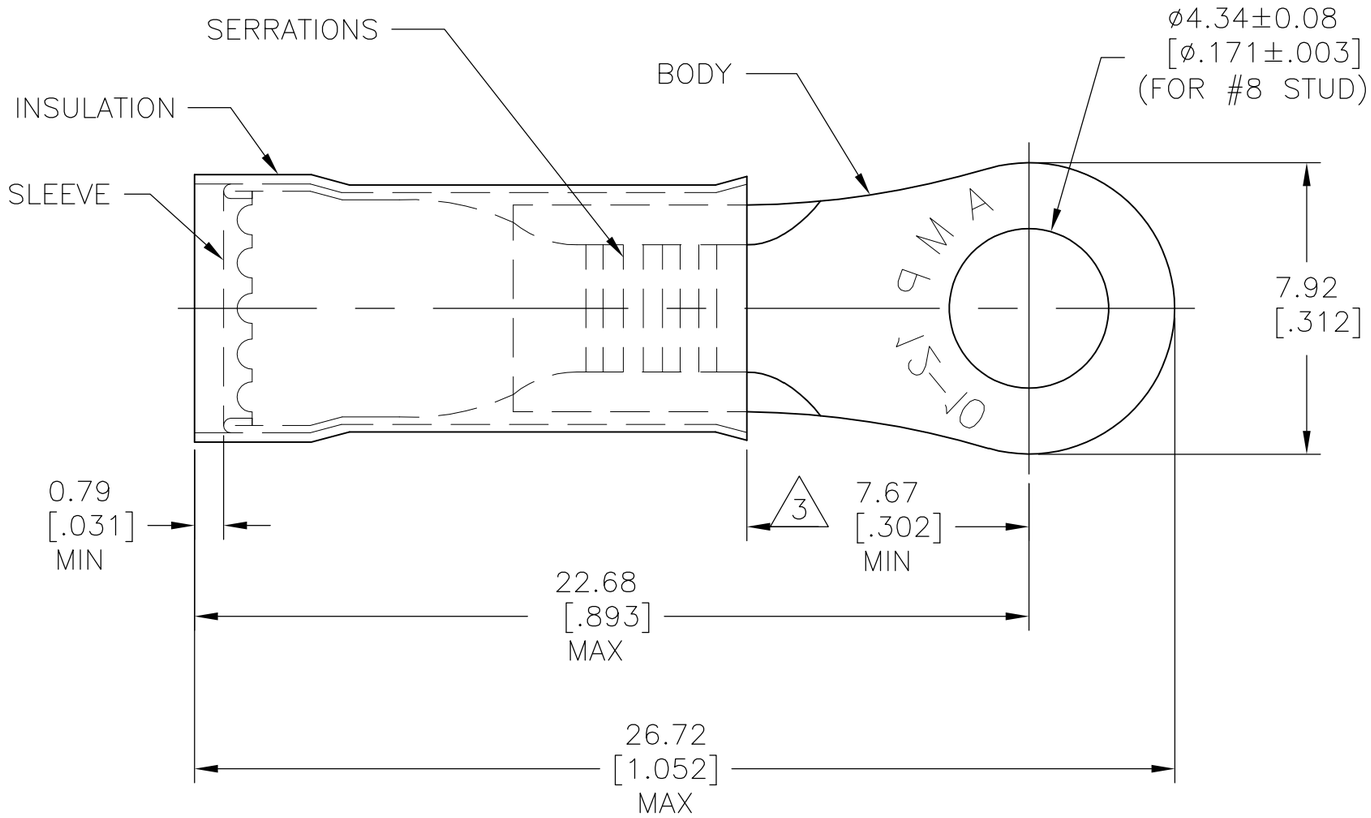

QTY	DESCRIPTION	MATERIAL & FINISH	PART NO
100	LOOSE PC, BOX	BODY: COPPER (ASTM-B152) TIN PL (ASTM-B545) SLEEVE: COPPER (ASTM-B152) INSULATION: NYLON COLOR: YELLOW	8-324915-1
OBSOLETE ~~4000~~	324915 ON TAPE		~~1-324915-1~~
1	WIRE TERMINAL		324915

THIS DRAWING IS A CONTROLLED DOCUMENT.

DIMENSIONS: mm [INCHES]

TOLERANCES UNLESS OTHERWISE SPECIFIED:

0 PLC	± -
1 PLC	± -
2 PLC	± -
3 PLC	± 0.20 [.008]
4 PLC	± -
ANGLES	± 5°

MATERIAL: SEE TABLE

FINISH: SEE TABLE

DWN RAGHAVENDRA 27AUG09
CHK JEFF RUTH 27AUG09
APVD TOM MICHIELUTTI 27AUG09
PRODUCT SPEC —
APPLICATION SPEC —
WEIGHT —

Tyco Electronics

Tyco Electronics Corporation
Harrisburg, PA 17105-3608

NAME: WIRE TERMINAL PIDG - RING TONGUE
WIRE SIZE: 12-10

SIZE	CAGE CODE	DRAWING NO	RESTRICTED TO
A3	00779	C-324915	—

CUSTOMER DRAWING

SCALE	SHEET	REV
6:1	1 OF 1	G1

1470-19 (1/08)