THIS DRAWING IS UNPUBLISHED. RELEASED FOR PUBLICATION -,- .
© COPYRIGHT - BY TYCO ELECTRONICS CORPORATION. ALL RIGHTS RESERVED.

LOC	DIST
G	14

REVISIONS

P	LTR	DESCRIPTION	DATE	DWN	APVD
	E1	REV PER ECR 07-014387	19JUN07	JR	TM

1. STAMP AMP 18-16, APPROX AS SHOWN
2. WIRE INSULATION DIA IS 1.4-2.8mm [.055-.110] DIA
3. TONGUE MATERIAL THICKNESS IS 0.79±0.05 [.031±.002].
4. APPLIES FROM EDGE OF WIRE BARREL TO CENTER OF STUD HOLE.
5. MATERIAL: BODY - COPPER PER ASTM B-152
   SLEEVE - NYLON
6. FINISH: BODY - TIN PLATE PER ASTM B-545
   SLEEVE - COLOR, ORANGE

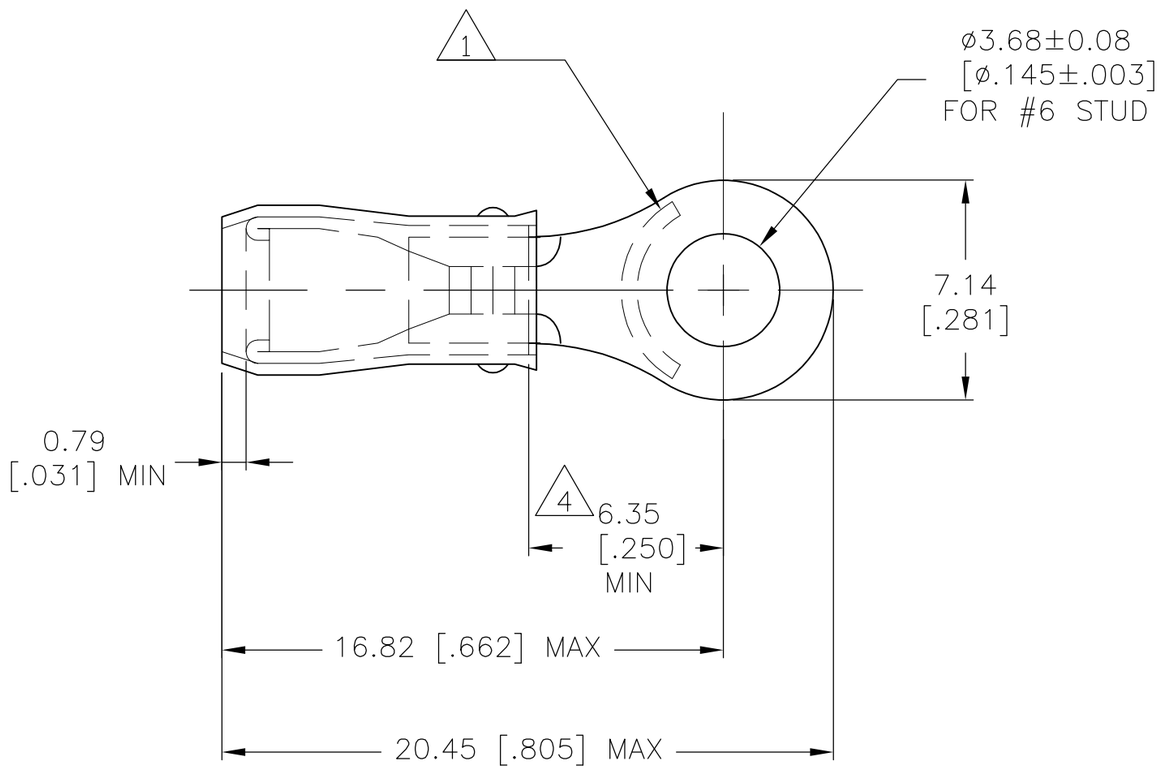

QTY	PACKAGE TYPE	PART NO.
1000	LOOSE PIECE	152884

AMP INCORPORATED
CUSTOMER SERVICE SYSTEMS

FOR ADDITIONAL PRODUCT INFORMATION OR COPIES OF DRAWINGS AND TECHNICAL DOCUMENTS	PRODUCT INFORMATION CENTER 1-800-522-6752
FOR APPLICATION TOOLING INFORMATION	TOOLING ASSISTANCE CENTER 1-800-722-1111
FOR ORDER ENTRY	1-800-526-5142

THIS DRAWING IS A CONTROLLED DOCUMENT FOR AMP INCORPORATED. IT IS SUBJECT TO CHANGE AND THE CONTROLLING ENGINEERING ORGANIZATION SHOULD BE CONTACTED FOR THE LATEST REVISION.

MAX RECOMMENDED OPERATING TEMPERATURE: 105°C [221°F]

VOLTAGE RATING: 300 V MAX

CIRCULAR MIL AREA: 0.81-1.65mm² [1600-3260] SOLID OR STRANDED

THIS DRAWING IS A CONTROLLED DOCUMENT.

DIMENSIONS: mm [INCHES]

TOLERANCES UNLESS OTHERWISE SPECIFIED:

0 PLC	± -
1 PLC	± -
2 PLC	± 0.20 [.008]
3 PLC	± -
4 PLC	± -
ANGLES	± -

MATERIAL 5

FINISH 6

DWN	JR RUTH	19JUN2007
CHK	T MICHIELUTTI	19JUN07
APVD	T MICHIELUTTI	19JUN07
PRODUCT SPEC	—	
APPLICATION SPEC	—	
WEIGHT	—	

Tyco Electronics

Tyco Electronics Corporation
Harrisburg, PA 17105-3608

NAME
TERMINAL, RING TONGUE,
PIDG, WIRE SIZE: 18-16 AWG
—

SIZE	CAGE CODE	DRAWING NO	RESTRICTED TO
A3	00779	C-152884	—

CUSTOMER DRAWING | SCALE 5:1 | SHEET 1 OF 1 | REV E1

AMP 1470-19 REV 31MAR2000