MALE END VIEW

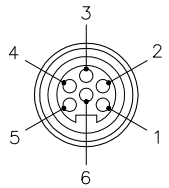

1 = GREEN
2 = WHITE
3 = BLUE
4 = GRAY
5 = YELLOW
6 = BROWN

SPECIFICATIONS

CONTACT CARRIER MATERIAL/COLOR	TPU/BLACK
CONTACT MATERIAL/PLATING	BRASS/GOLD
HOUSING MATERIAL/COLOR	NYLON/BLACK
O-RING MATERIAL	BUNA-N (NITRILE)
RATED CURRENT [A]	8.0 A
RATED VOLTAGE [V]	600 V
CONDUCTOR INSULATION MATERIAL	PVC
NUMBER OF CONDUCTORS [AWG]	6x18 AWG
TEMPERATURE RATING	-40°C to +105°C (-40°F to +221°F)
PROTECTION CLASS	MEETS NEMA 1,3,4,6P AND IEC IP67

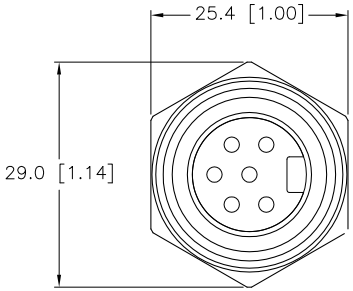

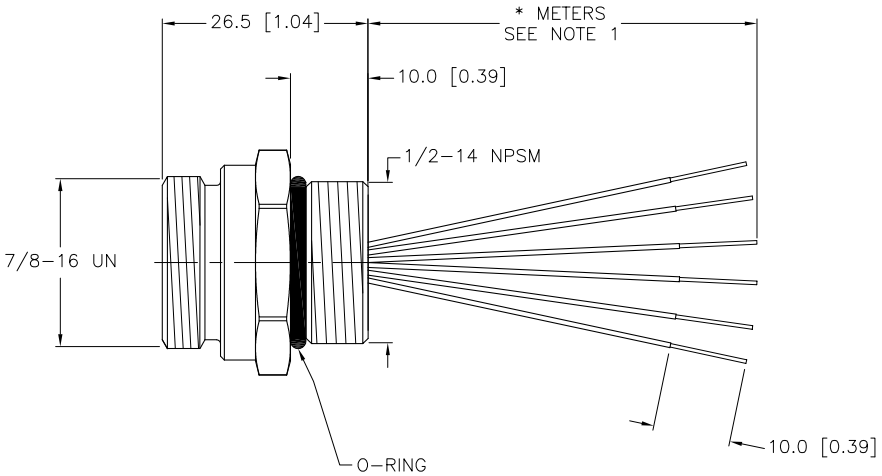

CABLE LENGTH	TOLERANCE
ALL LENGTHS	+ 4% (OR 50mm) OF LENGTH - 0% (OR 0mm) OF LENGTH WHICHEVER IS GREATER
STRIP LENGTH	**TOLERANCE**
0-7mm	±0.5mm
8-29mm	±1.0mm
30-49mm	±2.0mm
50-69mm	±3.0mm
70-100mm	±4.0mm
OVER 100mm	±5.0mm

SOURCE DRAWING - FOR REFERENCE ONLY

NOTES:

1. "*" INDICATES LEAD LENGTH IN METERS. CONTACT TURCK TO ORDER SPECIFIC LENGTHS.

REV	DESCRIPTION	BY	DATE	ECO NO.
D	REMOVE LONG PIN DESIGNATION	RDS	08/05/11	35979

RELATED DOCUMENTS
1.
2.
3.
4.

3RD ANGLE PROJECTION

THIS DRAWING IS CONFIDENTIAL AND THE PROPERTY OF TURCK INC. USE OF THIS DOCUMENT WITHOUT WRITTEN PERMISSION IS PROHIBITED.

TURCK INC
High Technology Sensors and Automation Controls

3000 CAMPUS DRIVE
MINNEAPOLIS, MN 55441
1-800-544-7769
(763) 553-7300
(763) 553-0708 fax
turck.com

MATERIAL: ALUMINUM

FINISH: BLACK ANODIZED

ALL DIMENSIONS DISPLAYED ON THIS DRAWING ARE FOR REFERENCE ONLY

CONTACT TURCK FOR MORE INFORMATION

DRFT: RWC | DATE: 12/23/09
DSGN: | SCALE: 1=1.0

UNIT OF MEASUREMENT
MILLIMETER [INCH]
DO NOT SCALE THIS DRAWING

DESCRIPTION: RSFK 61-*M

IDENTIFICATION NO.:

REV: D

FILE: 777003803

SHEET 1 OF 1