THIS DRAWING IS UNPUBLISHED. RELEASED FOR PUBLICATION -,- .
© COPYRIGHT - BY TYCO ELECTRONICS CORPORATION. ALL RIGHTS RESERVED.

LOC	DIST
AJ	53

REVISIONS

P	LTR	DESCRIPTION	DATE	DWN	APVD
	0	RELEASED PER 0S14-0496-04.	25JAN2005	JGH	JGH

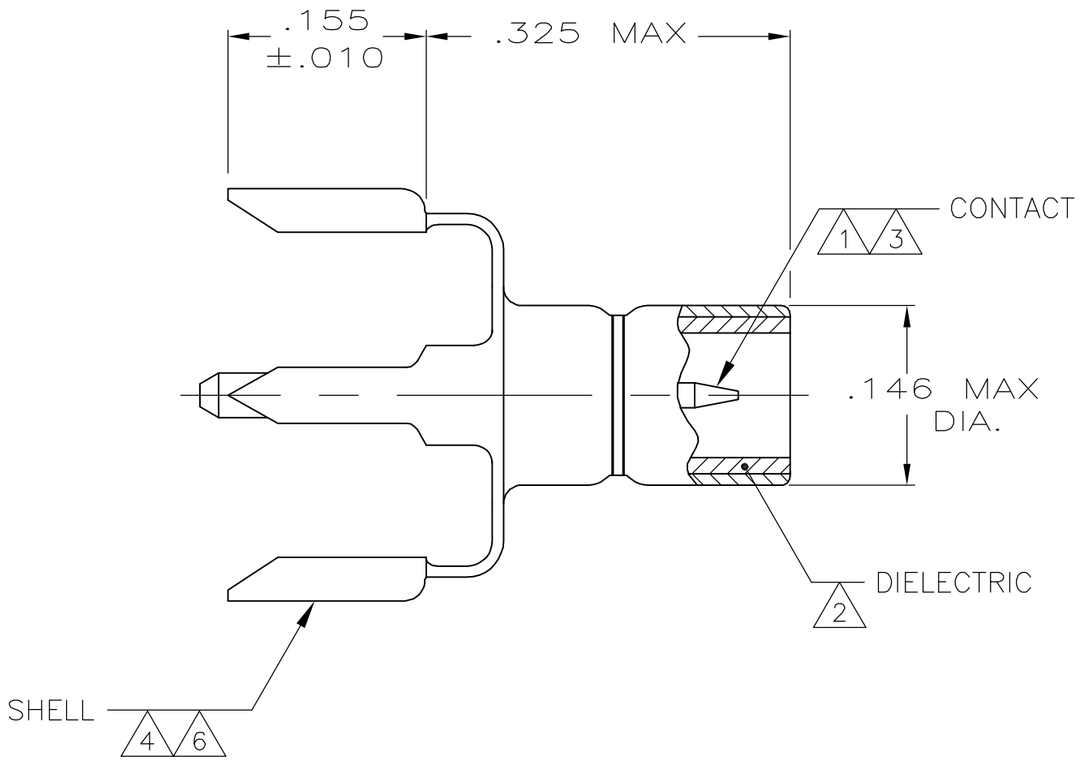

1. BRASS PER ASTM-B-16.
2. PTFE TEFLON PER ASTM-D-1710.
3. GOLD PLATE PER ASTM-B-488.
4. TIN PLATE PER ASTM-B-545.
5. NICKEL PLATE PER QQ-N-290.
6. BRASS PER ASTM-B-36.

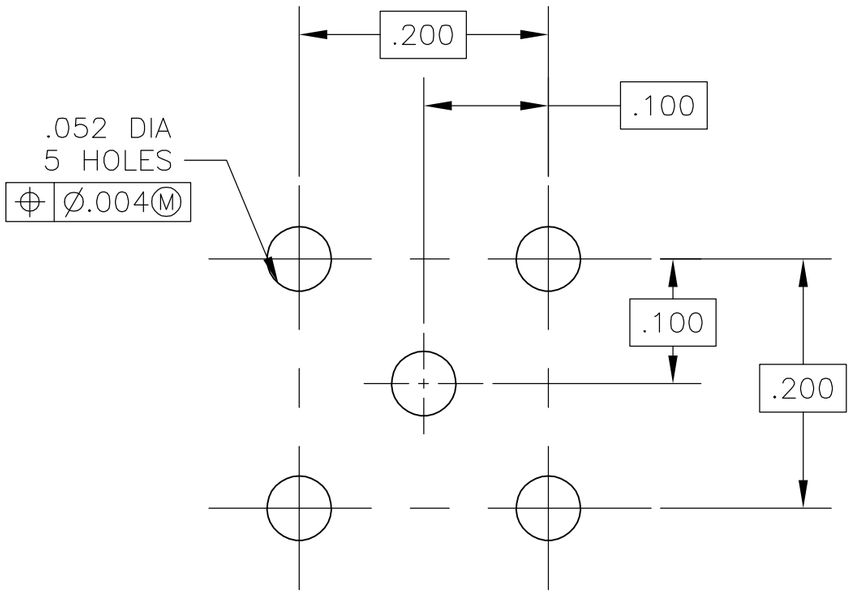

RECOMMENDED PCB HOLE CONFIGURATION

5221111-1

PART NUMBER

THIS DRAWING IS A CONTROLLED DOCUMENT.

DIMENSIONS: INCHES

TOLERANCES UNLESS OTHERWISE SPECIFIED:

0 PLC	± -
1 PLC	± -
2 PLC	± -
3 PLC	± .002
4 PLC	± -
ANGLES	± -

MATERIAL: SEE NOTES

FINISH: SEE NOTES

DWN	J. HAVENER	24JAN2005
CHK	J. HAVENER	25JAN2005
APVD	J. HAVENER	25JAN2005
PRODUCT SPEC	—	
APPLICATION SPEC	—	
WEIGHT	—	

CUSTOMER DRAWING

Tyco Electronics Corporation
Harrisburg, PA 17105-3608

NAME: JACK,PCB, VERTICAL SMB

SIZE	CAGE CODE	DRAWING NO	RESTRICTED TO
A3	00779	C-5221111	—

SCALE	SHEET	REV
8:1	1 OF 1	0

AMP 1470-19 REV 31MAR2000