Alle Rechte vorbehalten/ All rights reserved

Mating face according to : MIL-C-24308 / DIN 41652 / CECC 75.01-802

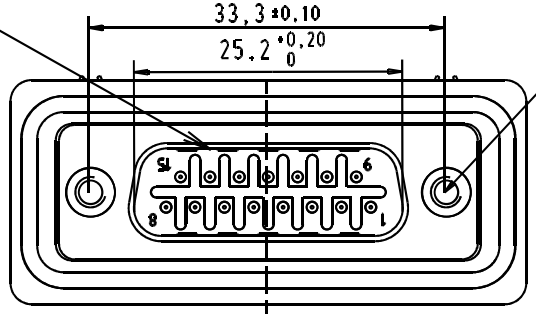

4-40 UNC -2B
length of engagement 3.5

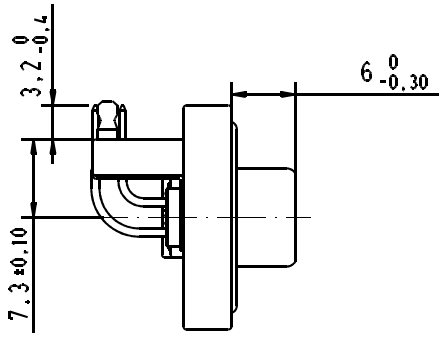

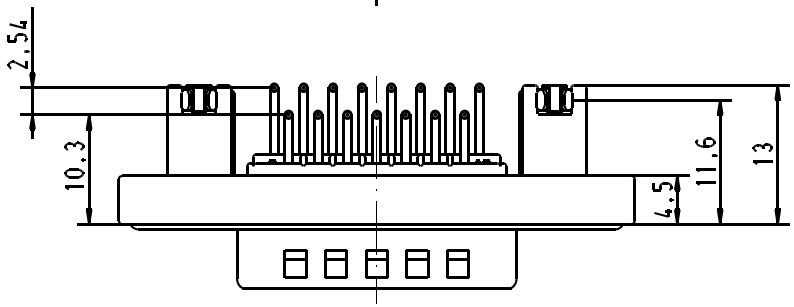

1) Protection standard IP 67 according to IEC 529 / DIN 40050.

PCB layout hole
component side
(PCB holes plating : Tin)

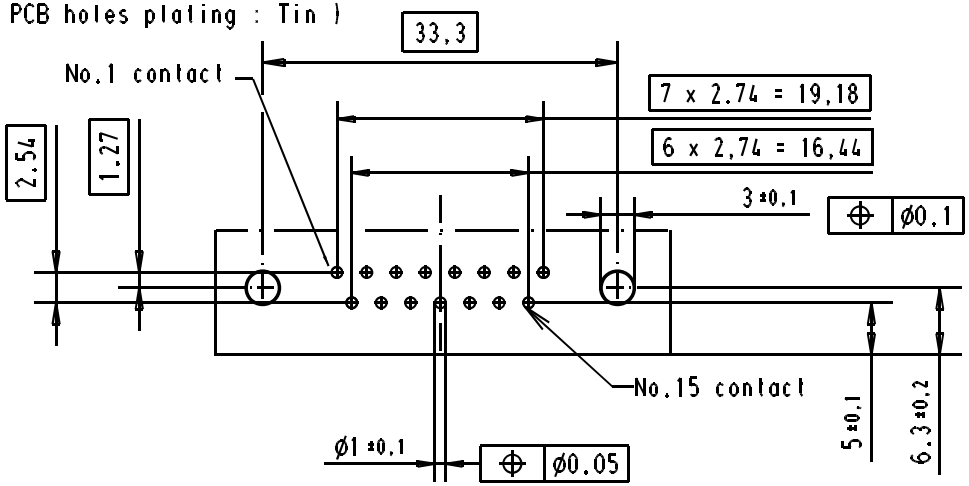

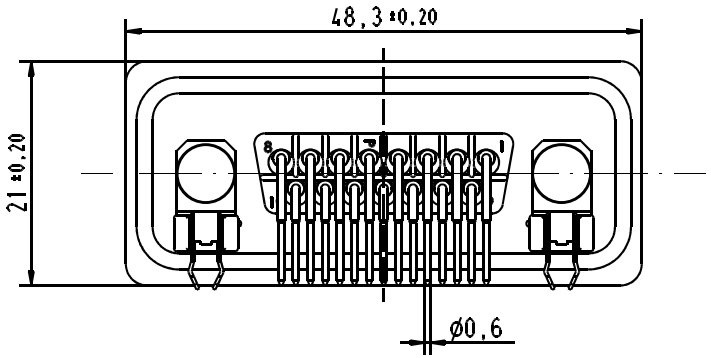

Part Number	Performance Level
09 67 515 7658	Au plating 0,76 µm mini

Mod.	Dat.	Name
31587	20/01/04	S.H

	Dat.	Name
Detail.	20/01/04	S.H.
Insp.		
Stand.		

All Dim. in mm
Orig. Size DIN A 4

D-SUB IP67 male 15 Poles
angled solder pin with
bracket and clipfor 1.6mm PCB
4-40 UNC nut

Maßstab/ Scale

HARTING ELEKTRONIK
F-95972 Paris

TB 09 67 515 7658

Sub.

Blatt/ Page