DATE	SYM	REVISION RECORD	DWN.	CK.

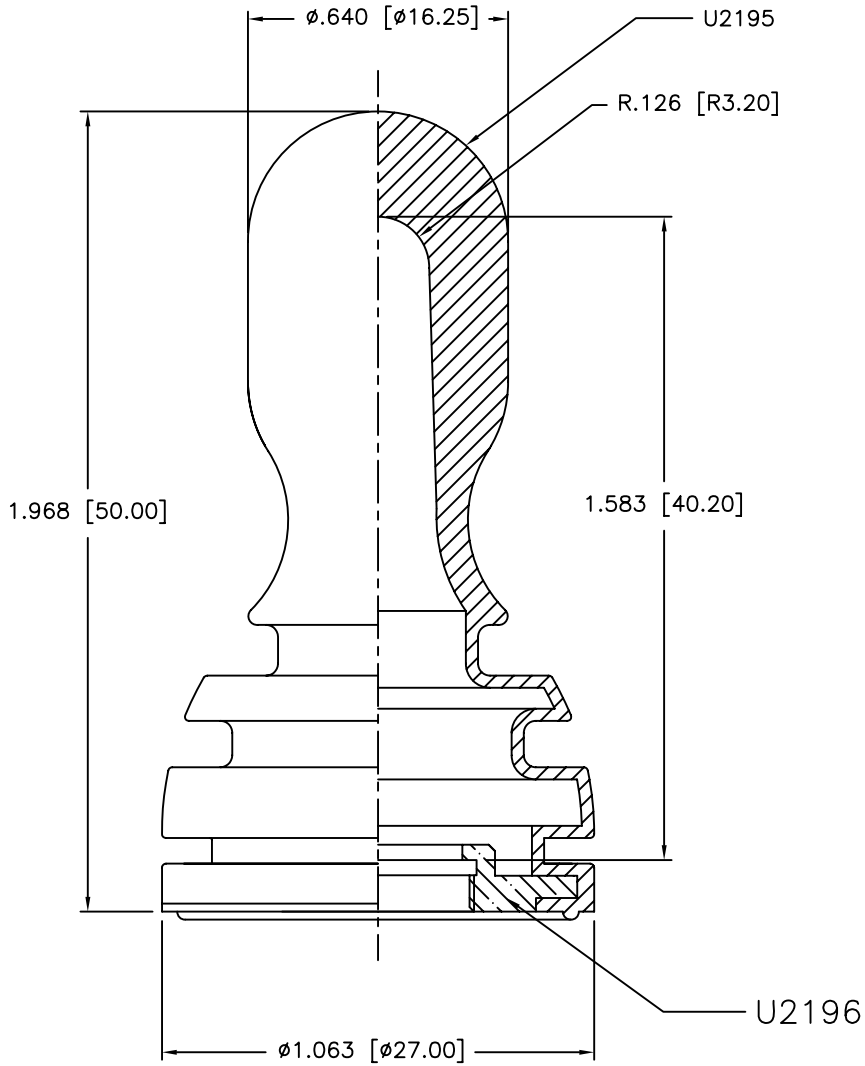

NOTE:
MATERIAL: NEOPRENE, SHORE 50, BLACK

Q.A. INSPECT.
△
DESIGNATES CRITICAL DIMENSION

APEM CONFIDENTIAL

THIS DOCUMENT CONTAINS INFORMATION WHICH IS THE EXCLUSIVE PROPERTY OF APEM COMPONENTS, INC. DISTRIBUTION, REPRODUCTION OR USE BY OTHERS IS NOT PERMITTED WITHOUT THE EXPRESS WRITTEN CONSENT OF APEM COMPONENTS, INC.

TOLERANCES (EXCEPT AS NOTED)	APEM HAVERHILL, MA.			
DECIMAL ±.012 / 0.30	INCH / (MM)		SCALE 3:1	DRAWN CJD / APPROVED
FRACTIONAL ±	TITLE TOGGLE SEALING BOOT			
ANGULAR ±	DATE 06/20/05	DRAWING NUMBER U2197		REV —