REVISIONS		
ISS	ZONE	DESCRIPTION\PER REQUEST\DATE

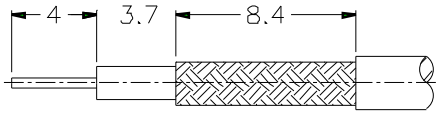

RECOMMENDED
CABLE STRIPPING DIM'S

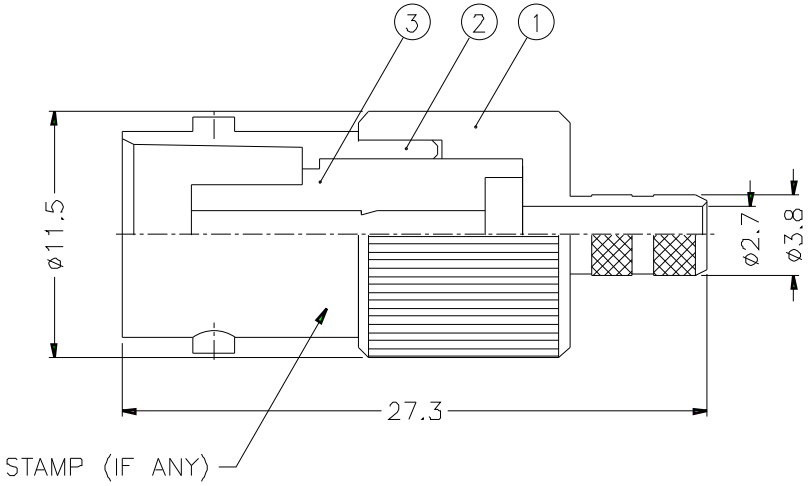

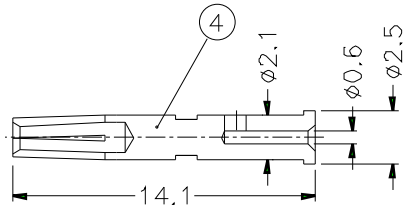

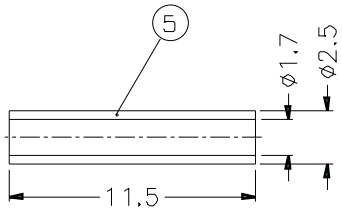

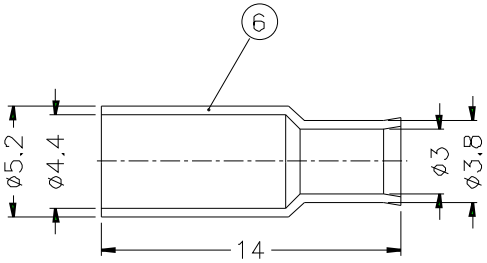

NOTES. FINISH (PLATING THICKNESS IN MICRO-INCHES)
1. BRASS PER QQ-B-626
2. NICKEL PL. 100 MIN. THICK OVER COPPER STRIKE
3 PHOSPHOR BRONZE PER QQ-B-750
4. GOLD PL. 3 MIN. THICK OVER NICKEL PL. 100 MIN. THICK OVER COPPER STRIKE
5. JIS H 3260, C 3501

1. CRIMPED FERRULE HEX CRIMP SIZE .178"
2. CRIMPED CONTACT PIN HEX CRIMP SIZE .068"

NO.	DESCRIPTION	MATERIAL	FINISH	Q'TY	DRAWING NO.
6	FERRULE	NOTE 5	NOTE 2	1	FR-52/44-38/3 X14
5	SLEEVE	DELRIN	NATURAL	1	SL-25/17X115
4	CONTACT PIN	NOTE 3	NOTE 4	1	B74000-8-25/06
3	INSULATOR	DELRIN	NATURAL	1	B74050-3-50-B
2	BODY	NOTE 1	NOTE 2	1	B74000-2
1	HOUSING	NOTE 1	NOTE 2	1	B70002-1-38/27

DIMENSIONS ARE IN MILLIMETERS

UNLESS OTHERWISE SPECIFIED TOLERANCES
0.5-6 = ±0.2
6-30 = ±0.4
30-120 = ±0.6
120-315 = ±1
315-1000 = ±1.6
1000-2000 = ±2.4

SCALE 3/1 ISSUE A

PART NO. B6121E1-ND3G-5-50

APPROVED DATE 10-11-01'

CHECKED DATE 10-11-01'

DRAWN DATE 10-11-01'

FILE NO.

Amphenol

TITLE BNC CRIMP JACK (FOR RG-174/U,188A/U,316/U)

DRAWING NO. KJ-B6121E1-ND3G-316U-50

ITEM NO.