THIS DRAWING IS UNPUBLISHED. RELEASED FOR PUBLICATION –,– .
© COPYRIGHT – By – ALL RIGHTS RESERVED.

LOC	DIST
FB	00

REVISIONS

P	LTR	DESCRIPTION	DATE	DWN	APVD
	P	REVISED PER ECO-11-005033	24MAR11	RK	HMR

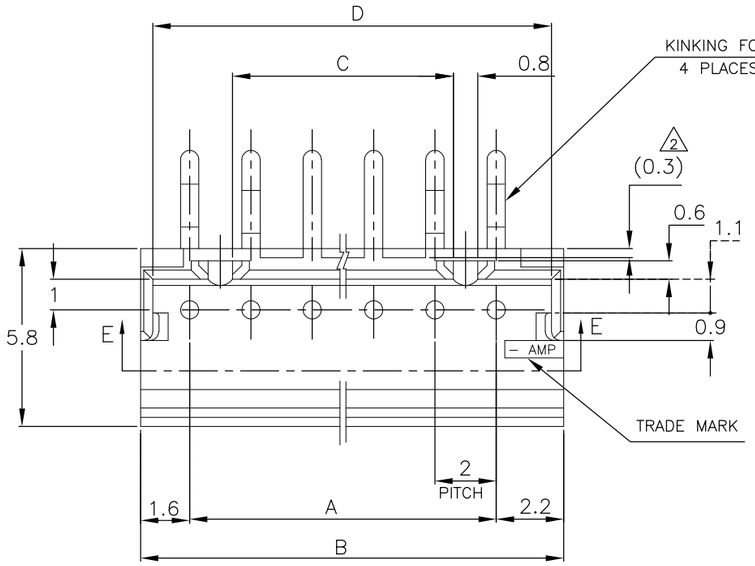

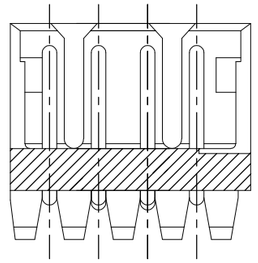

SECT E–E

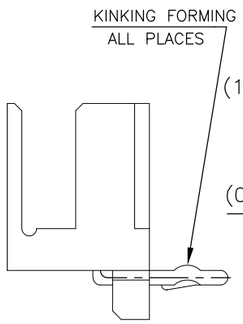

4 Pos.
(SCALE 4–1)

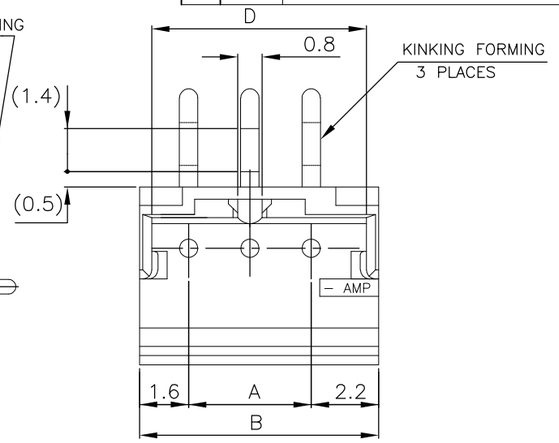

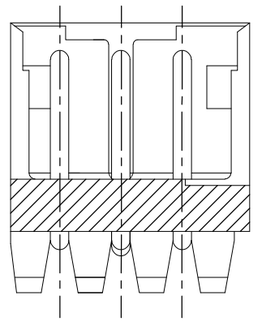

3 Pos.
SECT E–E

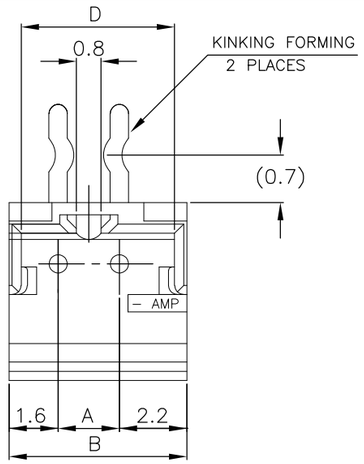

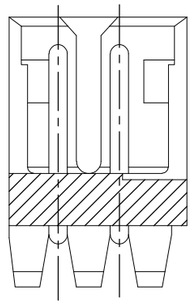

2 Pos.
SECT E–E

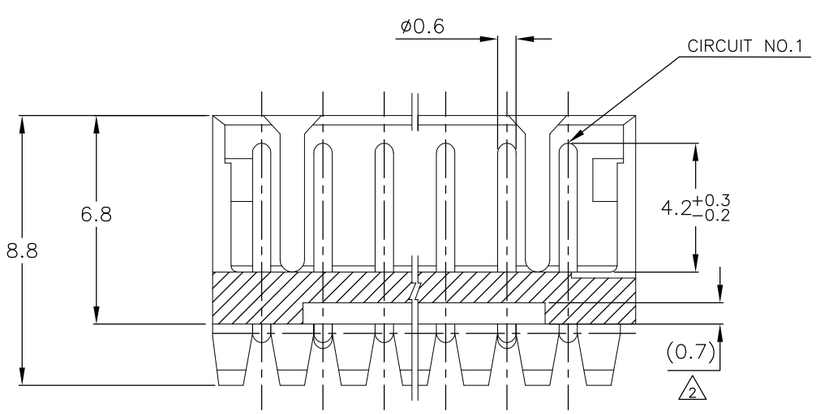

SECT E–E

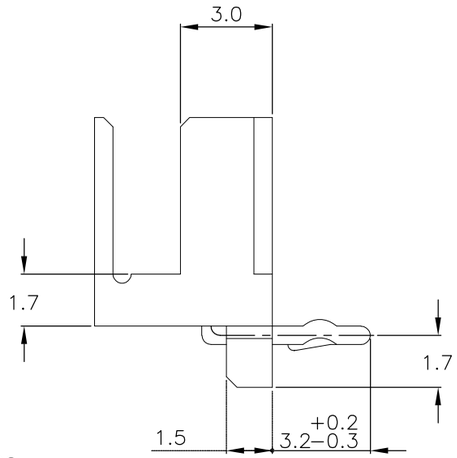

5~15 Pos.

7–292250–5		5–292250–5		3–292250–5		1–292250–5		15	28	31.8	25.2	31.0
7–	–4	5–	–4	3–	–4	1–	–4	14	26	29.8	23.2	29.0
7–	–3	5–	–3	3–	–3	1–	–3	13	24	27.8	21.2	27.0
7–	–2	5–	–2	3–	–2	1–	–2	12	22	25.8	19.2	25.0
7–	–1	5–	–1	3–	–1	1–	–1	11	20	23.8	17.2	23.0
7–	–0	5–	–0	3–	–0	1–	–0	10	18	21.8	15.2	21.0
6–	–9	4–	–9	2–	–9		–9	9	16	19.8	13.2	19.0
6–	–8	4–	–8	2–	–8		–8	8	14	17.8	11.2	17.0
6–	–7	4–	–7	2–	–7		–7	7	12	15.8	9.2	15.0
6–	–6	4–	–6	2–	–6		–6	6	10	13.8	7.2	13.0
6–	–5	4–	–5	2–	–5		–5	5	8	11.8	5.2	11.0
6–	–4	4–	–4	2–	–4		–4	4	6	9.8	3.2	9.0
6–	–3	4–	–3	2–	–3		–3	3	4	7.8	—	7.0
6–292250–2		4–292250–2		2–292250–2		292250–2		2	2	5.8	—	5.0
BLACK		YELLOW		BLUE		NATURAL		Pos.	A	B	C	D
PART NO.												

NOTES:

1. MATERIAL: HOUSING – NYLON 66 (UL94V–0)
   POST – TIN BRASS
2. 12 POS ~ 15 POS ONLY

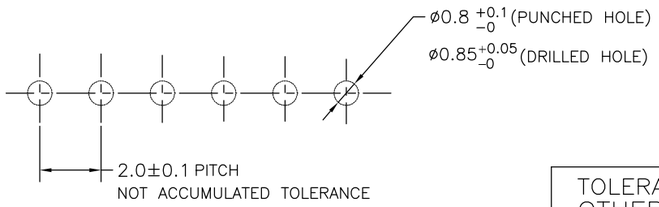

RECOMMENDABLE PCB LAYOUT
(PCB THK:0.8–1.6)

TOLERANCES UNLESS OTHERWISE SPECIFIED:

10≥ * : ±0.2
30≥ * >10 : ±0.25
100≥ * >30 : ±0.3
ANGLE : ±3°

THIS DRAWING IS A CONTROLLED DOCUMENT.

DIMENSIONS: mm

TOLERANCES UNLESS OTHERWISE SPECIFIED:
0 PLC ±–
1 PLC ±–
2 PLC ±–
3 PLC ±–
4 PLC ±–
ANGLES ±–

MATERIAL: SEE NOTE
FINISH: SEE NOTE

DWN	S.XU	31JAN03
CHK	S.YAO	31JAN03
APVD	T. SASAKI	31JAN03
PRODUCT SPEC	108–60016	
APPLICATION SPEC	—	
WEIGHT	—	

TE Connectivity

NAME: POST HEADER ASS'Y BOX–H DIP (AMP CT CONNECTOR 2mm PITCH)

SIZE	CAGE CODE	DRAWING NO	RESTRICTED TO
A3	00779	C–292250	—

CUSTOMER DRAWING | SCALE 5:1 | SHEET 1 OF 1 | REV P