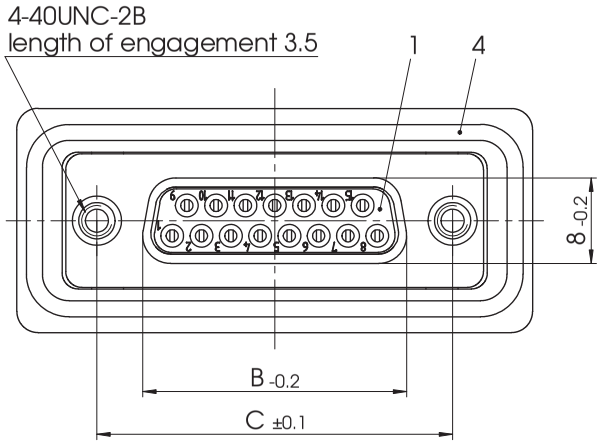

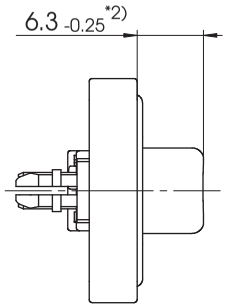

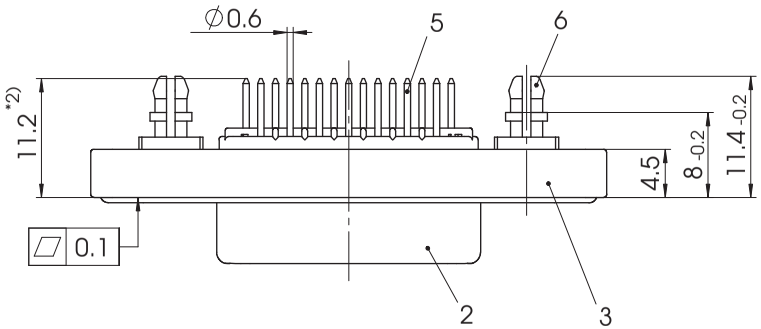

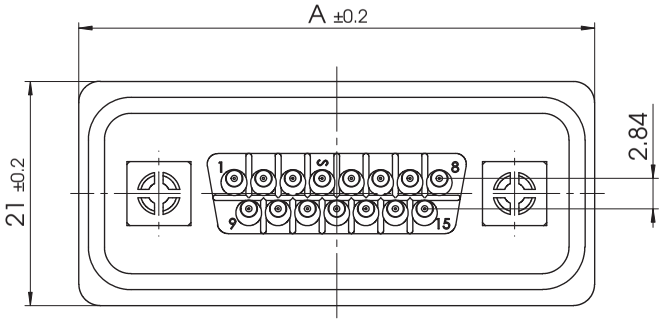

FWDRxx *1) S1A

e.g. FWDR15S1A

*1) xx No. of contacts 09, 15 or 25

xx	A mm	B mm	C mm	*øE mm	*øF mm
09	40	16.4	25	ø1	ø3
15	48.3	24.7	33.3		
25	62	38.5	47.04		

*PCB hole patterns, øE and øF on supplement AM0023

*2) Dimension startsfrom front surface of shell (Part-No. 2)

max. torque are 40 Ncm
D-Sub connector with watertight frame,
Protection standard IP67, 100% checked
according to DIN EN 60529 (compl. mounted)

No.	St.	Part	Type Description/Material	Surface plating/Colour/Class
6	2	Snap-in bolt	PCB 1.6mm 4-40 / Brass	tin plated
5	xx	Signal contact	S1 / Brass	AuroPur / 0.1-0.2 µm Au
4	1	O-ring seal	Silicone / UL94V-0	red
3	1	Watertight frame	PBT	black
2	1	Shell	Brass	tin plated
1	1	Insulator	PBT (-25°C - +70°C)	red

REV.	DATE	CH.-NO.
1		

Measurement without tolerance acc. to ISO 2768-m

SCALE 2:1

	NAME / DATE
DRAWN	tatjana.schneider 10-07-2013
CHECKED	Anke.Meyer-Richter 11-07-2013

FCT group
fctgroup.com

ORIGINAL: DIN A3-DRAWING AS A FILE

TITLE
Waterproof Connector System

DWG.NO. FWDRxxS1A

REV. 1

REPLACEMENT FOR:

PAGES 1

COMMENT:
ALL RIGHTS ARE RESERVED BY US FOR THIS DRAWING. WITHOUT OUR PRIOR CONSENT,
IT MAY NEITHER BE DUBLICATED NOR MADE AVAILABLE TO A THIRD PARTY,
AND IT ALSO MAY NOT BE IMPROPERLY USED BY TE RECEIVER, OR A THIRD PARTY.