FAIRCHILD SEMICONDUCTOR®

July 2008

FDP150N10

N-Channel PowerTrench® MOSFET

100V, 57A, 15mΩ

Features

- $R_{DS(on)}$ = 12mΩ (Typ.) @ V_{GS} = 10V, I_D = 49A
- Fast switching speed
- Low gate charge
- High performance trench technology for extremely low $R_{DS(on)}$
- High power and current handling capability
- RoHS compliant

General Description

This N-Channel MOSFET is produced using Fairchild Semiconductor's advanced PowerTrench process that has been especially tailored to minimize the on-state resistance and yet maintain superior switching performance.

Application

- DC to DC convertors / Synchronous Rectification

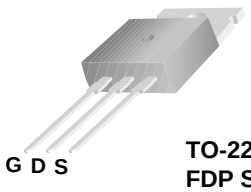

TO-220
FDP Series

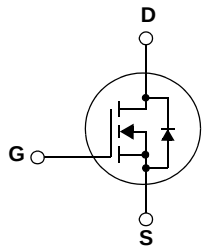

MOSFET Maximum Ratings T_C = 25°C unless otherwise noted

Symbol	Parameter		Ratings	Units
V_{DSS}	Drain to Source Voltage		100	V
V_{GSS}	Gate to Source Voltage		±20	V
I_D	Drain Current	-Continuous (T_C = 25°C)	57	A
		-Continuous (T_C = 100°C)	40	A
I_{DM}	Drain Current	- Pulsed (Note 1)	228	A
E_{AS}	Single Pulsed Avalanche Energy	(Note 2)	132	mJ
dv/dt	Peak Diode Recovery dv/dt	(Note 3)	7.5	V/ns
P_D	Power Dissipation	(T_C = 25°C)	110	W
		- Derate above 25°C	0.88	W/°C
T_J, T_{STG}	Operating and Storage Temperature Range		-55 to +150	°C
T_L	Maximum Lead Temperature for Soldering Purpose, 1/8" from Case for 5 Seconds		300	°C

Thermal Characteristics

Symbol	Parameter	Ratings	Units
$R_{\theta JC}$	Thermal Resistance, Junction to Case	1.13	°C/W
$R_{\theta CS}$	Thermal Resistance, Case to Sink Typ.	0.5	
$R_{\theta JA}$	Thermal Resistance, Junction to Ambient	62.5	

©2008 Fairchild Semiconductor Corporation

Package Marking and Ordering Information $T_C = 25^oC$ unless otherwise noted

Device Marking	Device	Package	Reel Size	Tape Width	Quantity
FDP150N10	FDP150N10	TO-220	-	-	50

Electrical Characteristics

Symbol	Parameter	Test Conditions	Min.	Typ.	Max.	Units
Off Characteristics						
BV_{DSS}	Drain to Source Breakdown Voltage	$I_D = 250\mu A$, $V_{GS} = 0V$, $T_C = 25^oC$	100	-	-	V
$\frac{\Delta BV_{DSS}}{\Delta T_J}$	Breakdown Voltage Temperature Coefficient	$I_D = 250\mu A$, Referenced to 25^oC	-	0.1	-	$V/^oC$
I_{DSS}	Zero Gate Voltage Drain Current	$V_{DS} = 100V$, $V_{GS} = 0V$	-	-	1	μA
		$V_{DS} = 100V$, $V_{GS} = 0V$, $T_C = 150^oC$	-	-	500	
I_{GSS}	Gate to Body Leakage Current	$V_{GS} = \pm 20V$, $V_{DS} = 0V$	-	-	±100	nA
On Characteristics						
$V_{GS(th)}$	Gate Threshold Voltage	$V_{GS} = V_{DS}$, $I_D = 250\mu A$	2.5	-	4.5	V
$R_{DS(on)}$	Static Drain to Source On Resistance	$V_{GS} = 10V$, $I_D = 49A$	-	12	15	mΩ
g_{FS}	Forward Transconductance	$V_{DS} = 20V$, $I_D = 49A$ (Note 4)	-	156	-	S
Dynamic Characteristics						
C_{iss}	Input Capacitance	$V_{DS} = 25V$, $V_{GS} = 0V$ f = 1MHz	-	3580	4760	pF
C_{oss}	Output Capacitance		-	340	450	pF
C_{rss}	Reverse Transfer Capacitance		-	140	210	pF
Switching Characteristics						
$t_{d(on)}$	Turn-On Delay Time	$V_{DD} = 50V$, $I_D = 49A$ $V_{GS} = 10V$, $R_{GEN} = 25\Omega$ (Note 4, 5)	-	47	104	ns
t_r	Turn-On Rise Time		-	164	338	ns
$t_{d(off)}$	Turn-Off Delay Time		-	86	182	ns
t_f	Turn-Off Fall Time		-	83	176	ns
$Q_{g(tot)}$	Total Gate Charge at 10V	$V_{DS} = 80V$, $I_D = 49A$ $V_{GS} = 10V$ (Note 4, 5)	-	53	69	nC
Q_{gs}	Gate to Source Gate Charge		-	19	-	nC
Q_{gd}	Gate to Drain “Miller” Charge		-	15	-	nC
Drain-Source Diode Characteristics						
I_S	Maximum Continuous Drain to Source Diode Forward Current		-	-	57	A
I_{SM}	Maximum Pulsed Drain to Source Diode Forward Current		-	-	228	A
V_{SD}	Drain to Source Diode Forward Voltage	$V_{GS} = 0V$, $I_{SD} = 49A$	-	-	1.3	V
t_{rr}	Reverse Recovery Time	$V_{GS} = 0V$, $I_{SD} = 49A$ $dI_F/dt = 100A/\mu s$ (Note 4)	-	41	-	ns
Q_{rr}	Reverse Recovery Charge		-	70	-	nC

Notes:
1: Repetitive Rating: Pulse width limited by maximum junction temperature
2: L = 0.11mH, $I_{AS} = 49A$, $V_{DD} = 50V$, $R_G = 25\Omega$, Starting $T_J = 25°C$
3: $I_{SD} \leq 49A$, $di/dt \leq 200A/\mu s$, $V_{DD} \leq BV_{DSS}$, Starting $T_J = 25°C$
4: Pulse Test: Pulse width ≤ 300μs, Duty Cycle ≤ 2%
5: Essentially Independent of Operating Temperature Typical Characteristics

Typical Performance Characteristics

Figure 1. On-Region Characteristics

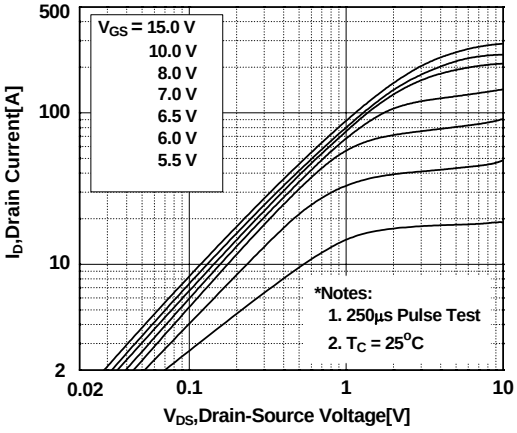

Figure 2. Transfer Characteristics

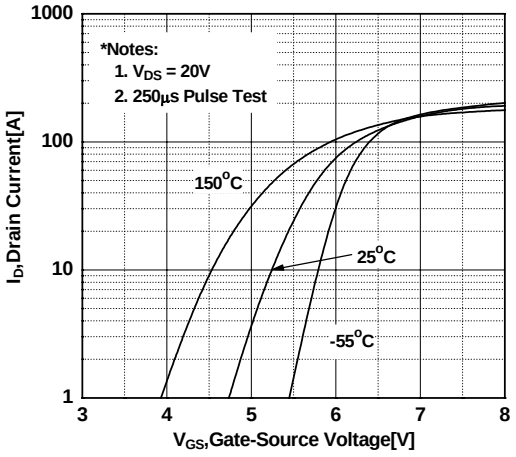

Figure 3. On-Resistance Variation vs. Drain Current and Gate Voltage

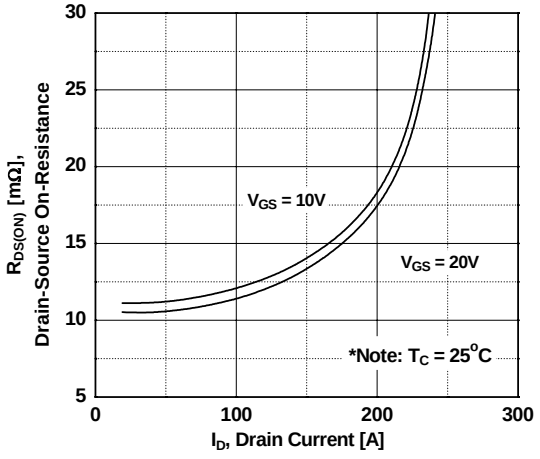

Figure 4. Body Diode Forward Voltage Variation vs. Source Current and Temperature

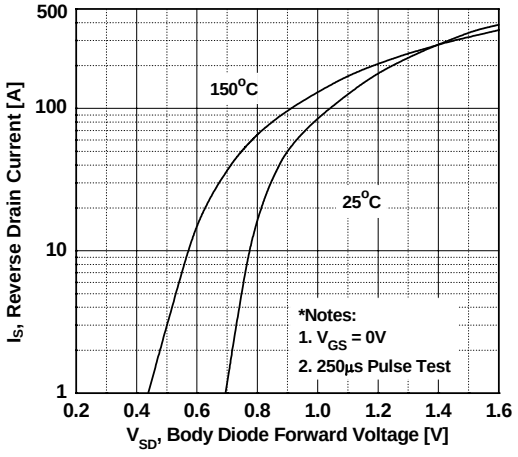

Figure 5. Capacitance Characteristics

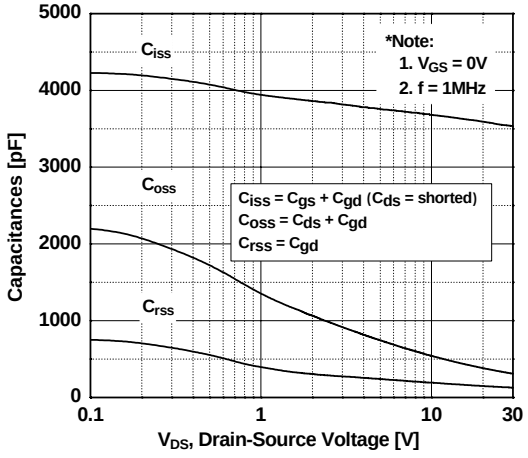

Figure 6. Gate Charge Characteristics

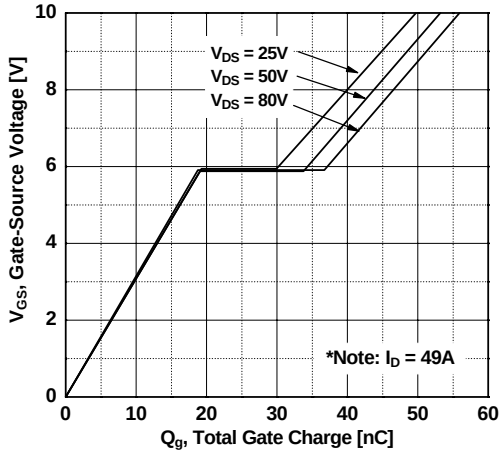

Typical Performance Characteristics (Continued)

Figure 7. Breakdown Voltage Variation vs. Temperature

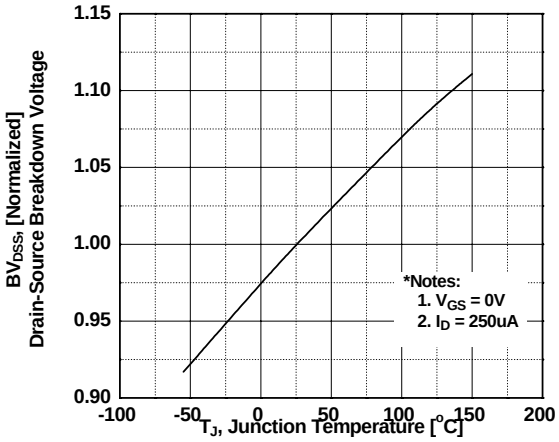

Figure 8. On-Resistance Variation vs. Temperature

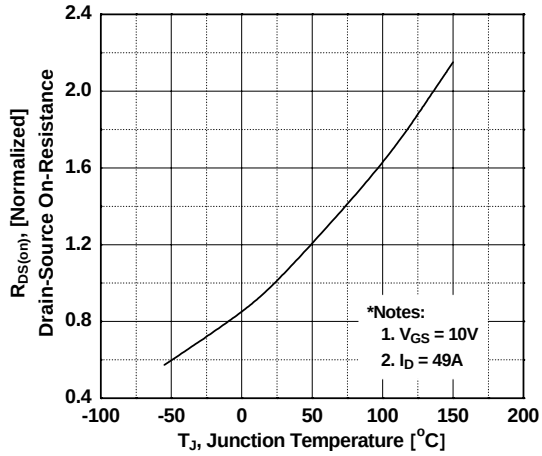

Figure 9. Maximum Safe Operating Area

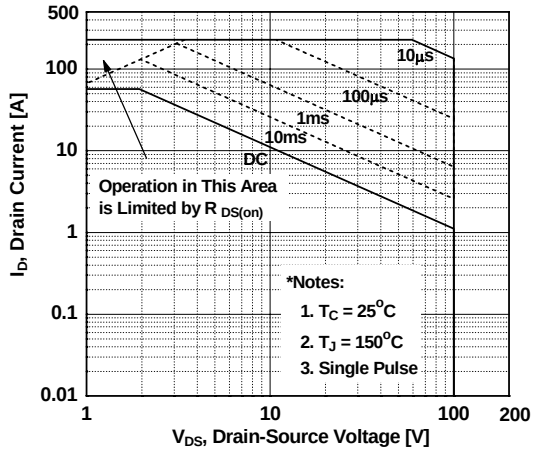

Figure 10. Maximum Drain Current vs. Case Temperature

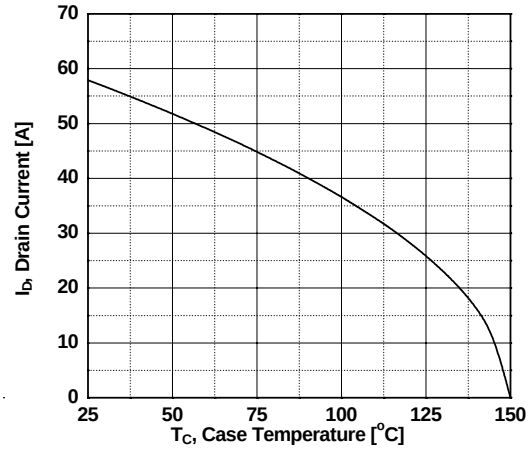

Figure 11. Transient Thermal Response Curve

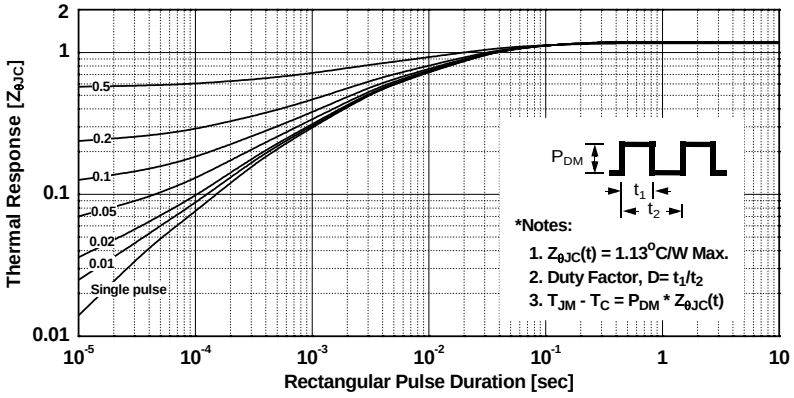

Gate Charge Test Circuit & Waveform

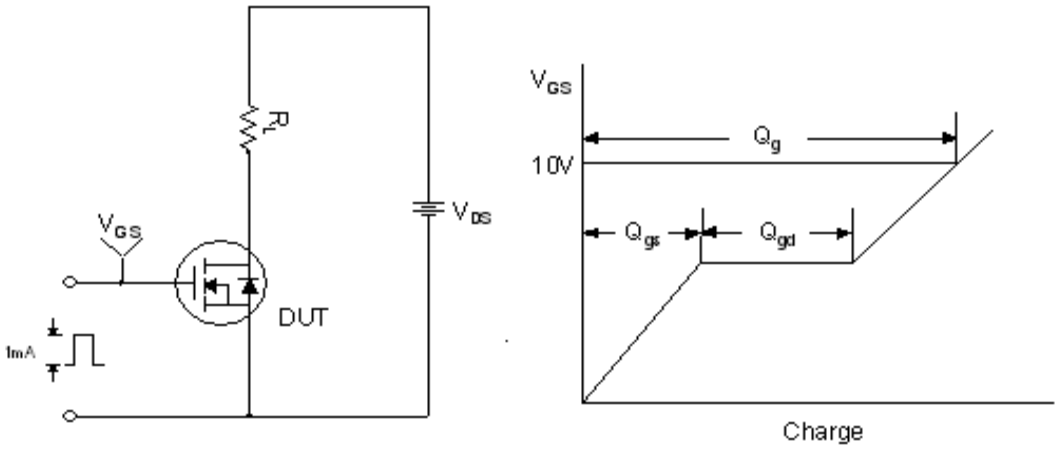

Resistive Switching Test Circuit & Waveforms

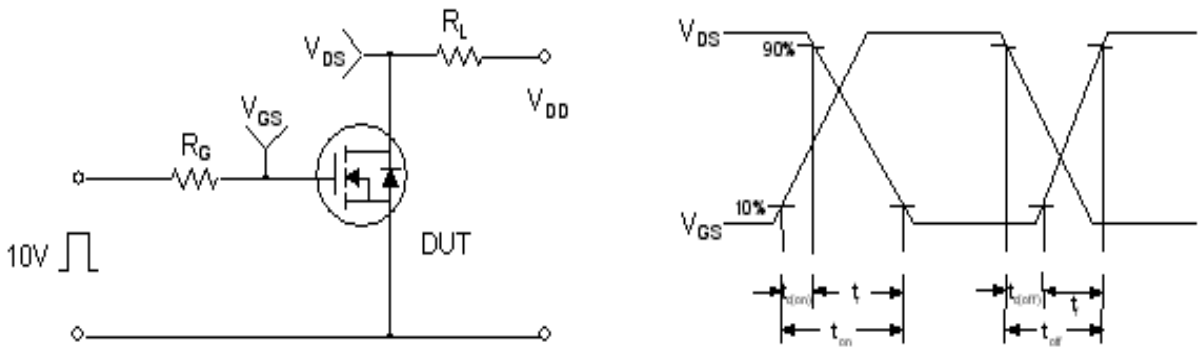

Unclamped Inductive Switching Test Circuit & Waveforms

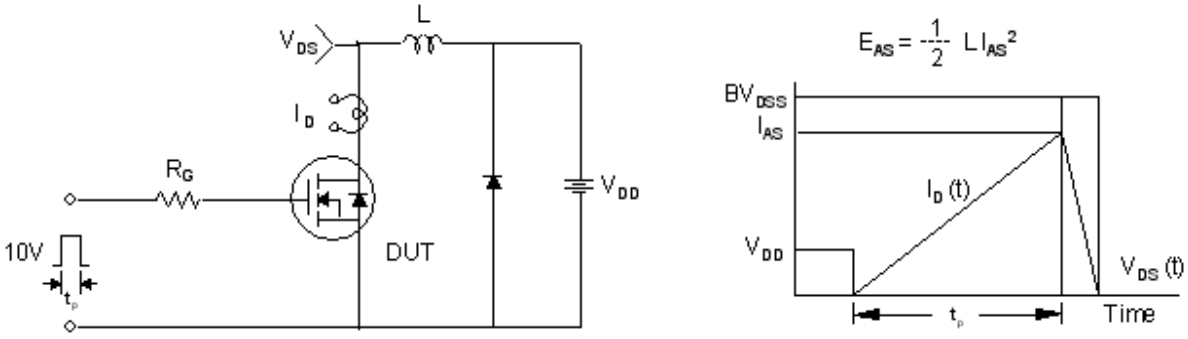

Peak Diode Recovery dv/dt Test Circuit & Waveforms

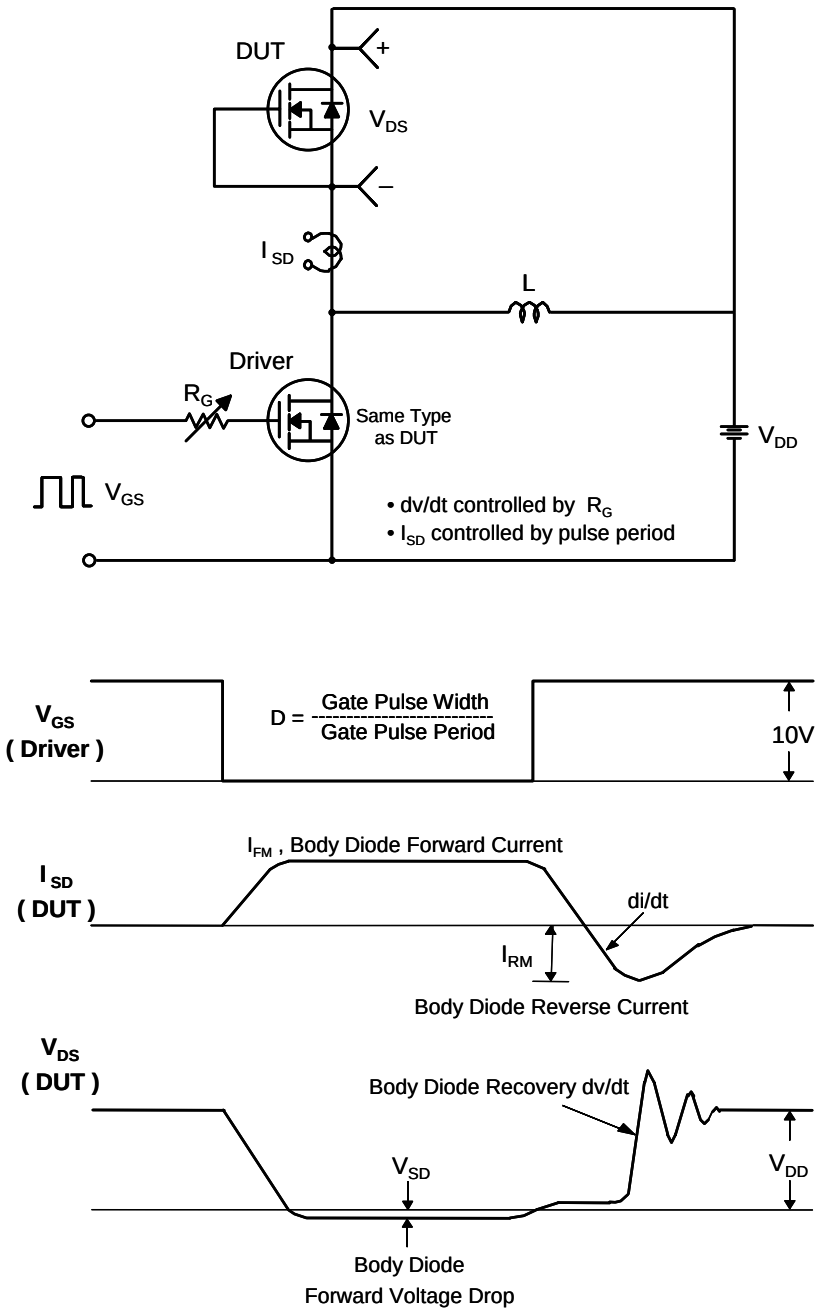

Mechanical Dimensions

TO-220

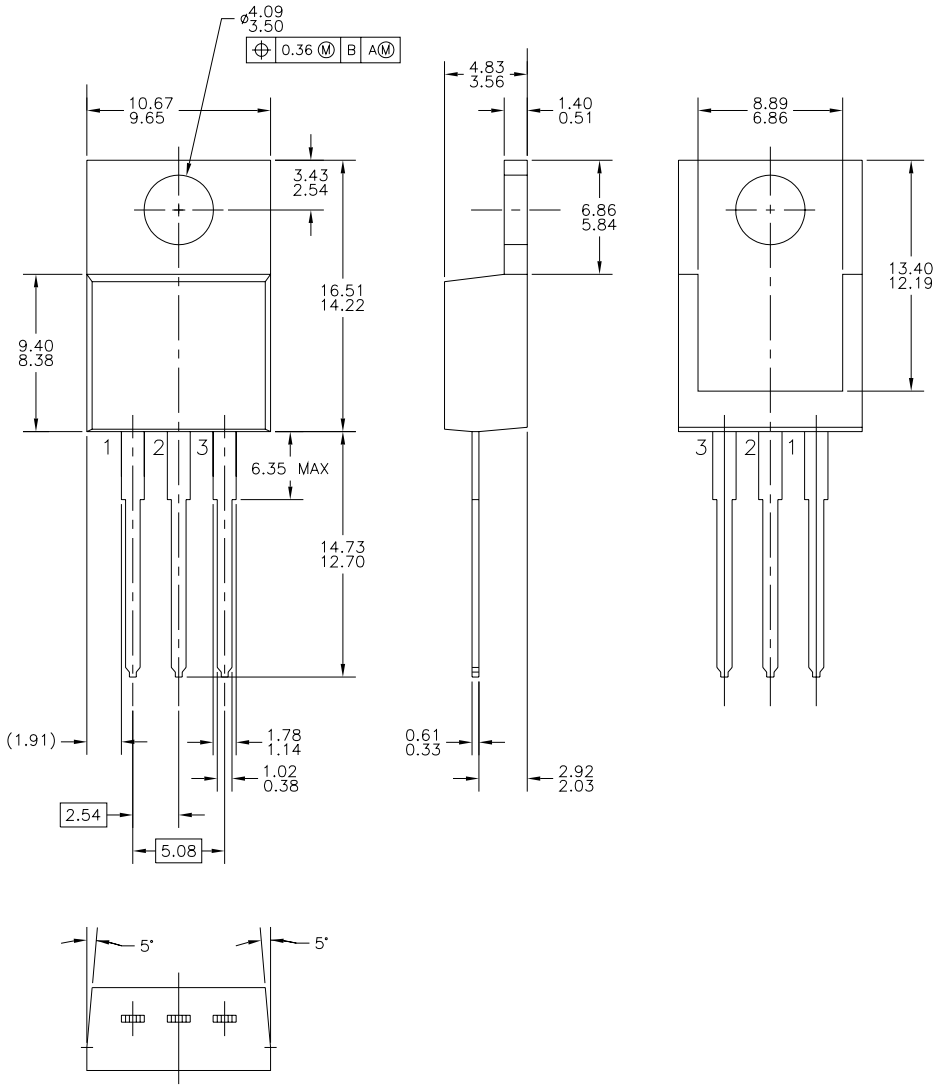

Dimensions in Millimeters

FAIRCHILD SEMICONDUCTOR®

TRADEMARKS

The following includes registered and unregistered trademarks and service marks, owned by Fairchild Semiconductor and/or its global subsidianries, and is not intended to be an exhaustive list of all such trademarks.

ACEx®
Build it Now™
CorePLUS™
CorePOWER™
CROSSVOLT™
CTL™
Current Transfer Logic™
EcoSPARK®
EfficentMax™
EZSWITCH™ *
™
®
Fairchild®
Fairchild Semiconductor®
FACT Quiet Series™
FACT®
FAST®
FastvCore™
FlashWriter® *
FPS™
F-PFS™
FRFET®
Global Power Resource℠
Green FPS™
Green FPS™ e-Series™
GTO™
IntelliMAX™
ISOPLANAR™
MegaBuck™
MICROCOUPLER™
MicroFET™
MicroPak™
MillerDrive™
MotionMax™
Motion-SPM™
OPTOLOGIC®
OPTOPLANAR®
®
PDP-SPM™
Power-SPM™
PowerTrench®
Programmable Active Droop™
QFET®
QS™
Quiet Series™
RapidConfigure™
Saving our world 1mW at a time™
SmartMax™
SMART START™
SPM®
STEALTH™
SuperFET™
SuperSOT™-3
SuperSOT™-6
SuperSOT™-8
SuperMOS™
SYSTEM GENERAL ®
The Power Franchise®
the power franchise
TinyBoost™
TinyBuck™
TinyLogic®
TINYOPTO™
TinyPower™
TinyPWM™
TinyWire™
µSerDes™
µSerDes
UHC®
Ultra FRFET™
UniFET™
VCX™
VisualMax™

* EZSWITCH™ and FlashWriter® are trademarks of System General Corporation, used under license by Fairchild Semiconductor.

DISCLAIMER

FAIRCHILD SEMICONDUCTOR RESERVES THE RIGHT TO MAKE CHANGES WITHOUT FURTHER NOTICE TO ANY PRODUCTS HEREIN TO IMPROVE RELIABILITY, FUNCTION, OR DESIGN. FAIRCHILD DOES NOT ASSUME ANY LIABILITY ARISING OUT OF THE APPLICATION OR USE OF ANY PRODUCT OR CIRCUIT DESCRIBED HEREIN; NEITHER DOES IT CONVEY ANY LICENSE UNDER ITS PATENT RIGHTS, NOR THE RIGHTS OF OTHERS. THESE SPECIFICATIONS DO NOT EXPAND THE TERMS OF FAIRCHILD'S WORLDWIDE TERMS AND CONDITIONS, SPECIFICALLY THE WARRANTY THEREIN, WHICH COVERS THESE PRODUCTS.

LIFE SUPPORT POLICY

FAIRCHILD'S PRODUCTS ARE NOT AUTHORIZED FOR USE AS CRITICAL COMPONENTS IN LIFE SUPPORT DEVICES OR SYSTEMS WITHOUT THE EXPRESS WRITTEN APPROVAL OF FAIRCHILD SEMICONDUCTOR CORPORATION.

As used herein:

1. Life support devices or systems are devices or systems which, (a) are intended for surgical implant into the body or (b) support or sustain life, and (c) whose failure to perform when properly used in accordance with instructions for use provided in the labeling, can be reasonably expected to result in a significant injury of the user.
2. A critical component in any component of a life support, device, or system whose failure to perform can be reasonably expected to cause the failure of the life support device or system, or to affect its safety or effectiveness.

PRODUCT STATUS DEFINITIONS

Definition of Terms

Datasheet Identification	Product Status	Definition
Advance Information	Formative or In Design	This datasheet contains the design specifications for product development. Specifications may change in any manner without notice.
Preliminary	First Production	This datasheet contains preliminary data; supplementary data will be published at a later date. Fairchild Semiconductor reserves the right to make changes at any time without notice to improve design.
No Identification Needed	Full Production	This datasheet contains final specifications. Fairchild Semiconductor reserves the right to make changes at any time without notice to improve the design.
Obsolete	Not In Production	This datasheet contains specifications on a product that is discontinued by Fairchild Semiconductor. The datasheet is for reference information only.

Rev. I34