THIS DRAWING IS UNPUBLISHED. RELEASED FOR PUBLICATION -,- .
© COPYRIGHT - BY TYCO ELECTRONICS CORPORATION. ALL RIGHTS RESERVED.

LOC	DIST
AD	00

REVISIONS

P	LTR	DESCRIPTION	DATE	DWN	APVD
	P	EC 0G3C 0218 05	28APR05	BSV	JLG
	P1	REVISED PER ECO-09-021826	06JAN10	KK	AEG

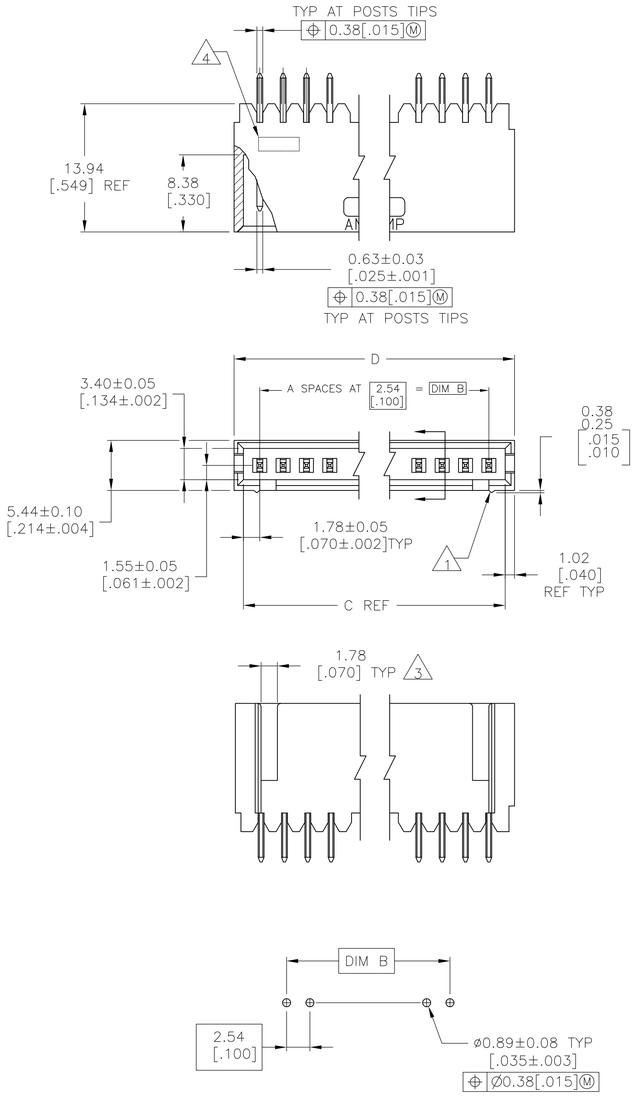

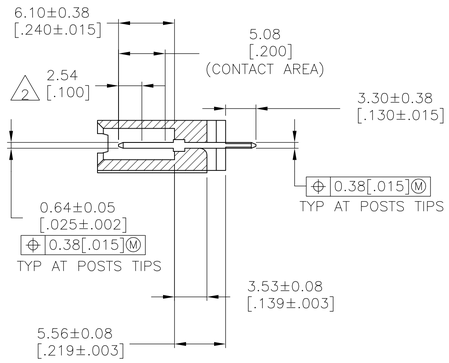

RECOMMENDED HOLE LAYOUT

1. STANDOFFS: UP TO 9 POS-(2 REQD) ON THE OUTSIDE ENDS OF THE HOUSING
10 TO 19 POS-(3 REQD) TWO ON THE OUTSIDE ENDS AND ONE CENTERED ON THE HOUSING
19 POS AND LARGER-(4 REQD) TWO ON THE OUTSIDE ENDS AND TWO SPACED EVENLY WITHIN THE REMAINING LENGTH OF THE HOUSING
2. POINT OF MEASUREMENT FOR PLATING THICKNESS
3. FOR 3 POS (3--4 ONLY) ONE SLOT, 5.46[.215] WIDE.
4. RECESSED DATE CODE
5. HOUSING: FLAME RETARDANT THERMOPLASTIC, COLOR - BLACK.
POSTS: BRASS.
6. 0.00038[.000015] GOLD ON THE CONTACT AREA,
0.00254[.000100]-0.00508[.000200] MATTE TIN-LEAD ON THE SOLDER TAIL
ALL OVER 0.00127[.000050] NICKEL.
7. 0.00038[.000015] GOLD ON THE CONTACT AREA,
0.00254[.000100]-0.00508[.000200] MATTE TIN ON THE SOLDER TAIL
ALL OVER 0.00127[.000050] NICKEL.
8. OBSOLETE PARTS: OBSOLETE CIS STREAMLINING PER D.RENAUD/D.SINISI

	3	7	10.67 [.420]	8.64 [.340]	5.08 [.200]	2	3	8-102202-4
8	OBSOLETE	7	66.55 [2.620]	64.52 [2.540]	60.96 [2.400]	24	25	~~7-102202-2~~
8	OBSOLETE	7	64.01 [2.520]	61.98 [2.440]	58.42 [2.300]	23	24	~~7-102202-1~~
8	OBSOLETE	7	61.47 [2.420]	59.44 [2.340]	55.88 [2.200]	22	23	~~7-102202-0~~
		7	58.93 [2.320]	56.90 [2.240]	53.34 [2.100]	21	22	6-102202-9
8	OBSOLETE	7	56.39 [2.220]	54.36 [2.140]	50.80 [2.000]	20	21	~~6-102202-8~~
		7	53.85 [2.120]	51.82 [2.040]	48.26 [1.900]	19	20	6-102202-7
8	OBSOLETE	7	51.31 [2.020]	49.28 [1.940]	45.72 [1.800]	18	19	~~6-102202-6~~
		7	48.77 [1.920]	46.74 [1.840]	43.18 [1.700]	17	18	6-102202-5
		7	46.23 [1.820]	44.20 [1.740]	40.64 [1.600]	16	17	6-102202-4
		7	43.69 [1.720]	41.66 [1.640]	38.10 [1.500]	15	16	6-102202-3
		7	41.15 [1.620]	39.12 [1.540]	35.56 [1.400]	14	15	6-102202-2
		7	38.61 [1.520]	36.58 [1.440]	33.02 [1.300]	13	14	6-102202-1
		7	36.07 [1.420]	34.04 [1.340]	30.48 [1.200]	12	13	6-102202-0
		7	33.53 [1.320]	31.50 [1.240]	27.94 [1.100]	11	12	5-102202-9
		7	30.99 [1.220]	28.96 [1.140]	25.40 [1.000]	10	11	5-102202-8
		7	28.45 [1.120]	26.42 [1.040]	22.86 [.900]	9	10	5-102202-7
		7	25.91 [1.020]	23.88 [.940]	20.32 [.800]	8	9	5-102202-6
		7	23.37 [.920]	21.34 [.840]	17.78 [.700]	7	8	5-102202-5
		7	20.83 [.820]	18.80 [.740]	15.24 [.600]	6	7	5-102202-4
		7	18.29 [.720]	16.26 [.640]	12.70 [.500]	5	6	5-102202-3
		7	15.75 [.620]	13.72 [.540]	10.16 [.400]	4	5	5-102202-2
		7	13.21 [.520]	11.18 [.440]	7.62 [.300]	3	4	5-102202-1
	3	6	10.67 [.420]	8.64 [.340]	5.08 [.200]	2	3	3-102202-4
	OBSOLETE	6	94.49 [3.720]	92.46 [3.640]	88.90 [3.500]	35	36	3-102202-3
	OBSOLETE	6	91.95 [3.620]	89.92 [3.540]	86.36 [3.400]	34	35	3-102202-2
	OBSOLETE	6	89.41 [3.520]	87.38 [3.440]	83.82 [3.300]	33	34	3-102202-1
	OBSOLETE	6	86.87 [3.420]	84.84 [3.340]	81.28 [3.200]	32	33	3-102202-0
	OBSOLETE	6	84.33 [3.320]	82.30 [3.240]	78.74 [3.100]	31	32	2-102202-9
	OBSOLETE	6	81.79 [3.220]	79.76 [3.140]	76.20 [3.000]	30	31	2-102202-8
	OBSOLETE	6	79.25 [3.120]	77.22 [3.040]	73.66 [2.900]	29	30	2-102202-7
	OBSOLETE	6	76.71 [3.020]	74.68 [2.940]	71.12 [2.800]	28	29	2-102202-6
	OBSOLETE	6	74.17 [2.920]	72.14 [2.840]	68.58 [2.700]	27	28	2-102202-5
	OBSOLETE	6	71.63 [2.820]	69.60 [2.740]	66.04 [2.600]	26	27	2-102202-4
	OBSOLETE	6	69.09 [2.720]	67.06 [2.640]	63.50 [2.500]	25	26	2-102202-3
		6	66.55 [2.620]	64.52 [2.540]	60.96 [2.400]	24	25	2-102202-2
8	OBSOLETE	6	64.01 [2.520]	61.98 [2.440]	58.42 [2.300]	23	24	~~2-102202-1~~
8	OBSOLETE	6	61.47 [2.420]	59.44 [2.340]	55.88 [2.200]	22	23	~~2-102202-0~~
		6	58.93 [2.320]	56.90 [2.240]	53.34 [2.100]	21	22	1-102202-9
8	OBSOLETE	6	56.39 [2.220]	54.36 [2.140]	50.80 [2.000]	20	21	~~1-102202-8~~
		6	53.85 [2.120]	51.82 [2.040]	48.26 [1.900]	19	20	1-102202-7
8	OBSOLETE	6	51.31 [2.020]	49.28 [1.940]	45.72 [1.800]	18	19	~~1-102202-6~~
		6	48.77 [1.920]	46.74 [1.840]	43.18 [1.700]	17	18	1-102202-5
8	SUPERSEDED BY 6-102202-4	6	46.23 [1.820]	44.20 [1.740]	40.64 [1.600]	16	17	~~1-102202-4~~
		6	43.69 [1.720]	41.66 [1.640]	38.10 [1.500]	15	16	1-102202-3
		6	41.15 [1.620]	39.12 [1.540]	35.56 [1.400]	14	15	1-102202-2
		6	38.61 [1.520]	36.58 [1.440]	33.02 [1.300]	13	14	1-102202-1
		6	36.07 [1.420]	34.04 [1.340]	30.48 [1.200]	12	13	1-102202-0
		6	33.53 [1.320]	31.50 [1.240]	27.94 [1.100]	11	12	102202-9
		6	30.99 [1.220]	28.96 [1.140]	25.40 [1.000]	10	11	102202-8
		6	28.45 [1.120]	26.42 [1.040]	22.86 [.900]	9	10	102202-7
		6	25.91 [1.020]	23.88 [.940]	20.32 [.800]	8	9	102202-6
		6	23.37 [.920]	21.34 [.840]	17.78 [.700]	7	8	102202-5
		6	20.83 [.820]	18.80 [.740]	15.24 [.600]	6	7	102202-4
		6	18.29 [.720]	16.26 [.640]	12.70 [.500]	5	6	102202-3
		6	15.75 [.620]	13.72 [.540]	10.16 [.400]	4	5	102202-2
		6	13.21 [.520]	11.18 [.440]	7.62 [.300]	3	4	102202-1
	PLATING		D	C	B	A	NO OF POSN	PART NUMBER

THIS DRAWING IS A CONTROLLED DOCUMENT.

DIMENSIONS: mm [INCHES]

TOLERANCES UNLESS OTHERWISE SPECIFIED:
0 PLC ± -
1 PLC ± -
2 PLC ± -
3 PLC ± 0.38 [.015]
4 PLC ± -
ANGLES ± -

MATERIAL 5

FINISH SEE TABLE

DWN E. BRANDBERG 04NOV97
CHK -
APVD S. SHUFEY 04NOV97
PRODUCT SPEC -
APPLICATION SPEC -
WEIGHT -

Tyco Electronics
Tyco Electronics Corporation
Harrisburg, Pa 17105-3608

NAME ASSEMBLY, MOD II, HEADER, SINGLE ROW, 2.54 [.100] C/L, VERTICAL, WITH 0.64 [.025] SQUARE POSTS

SIZE A1 | CAGE CODE 00779 | DRAWING NO C-102202 | RESTRICTED TO -

CUSTOMER DRAWING | SCALE 3:1 | SHEET 1 OF 1 | REV P1

AMP 4805 REV 31MAR2000