FEMALE END VIEW

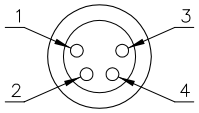

1 = BROWN
2 = WHITE
3 = BLUE
4 = BLACK

picofast

SPECIFICATIONS

CONTACT CARRIER MATERIAL	NYLON OR TPU
MOLDED HEAD MATERIAL/COLOR	TPU/YELLOW
CONTACT MATERIAL/PLATING	BRASS/GOLD
RATED CURRENT [A]	2.0 A
RATED VOLTAGE [V]	125 VAC/VDC
OUTER JACKET MATERIAL/COLOR	PVC/YELLOW
CONDUCTOR INSULATION MATERIAL	PVC
NUMBER OF CONDUCTORS [AWG]	4x26 AWG
TEMPERATURE RANGE	−40°C to +105°C (−40°F to +221°F)
PROTECTION CLASS	MEETS NEMA 1,3,4,6P AND IEC IP67

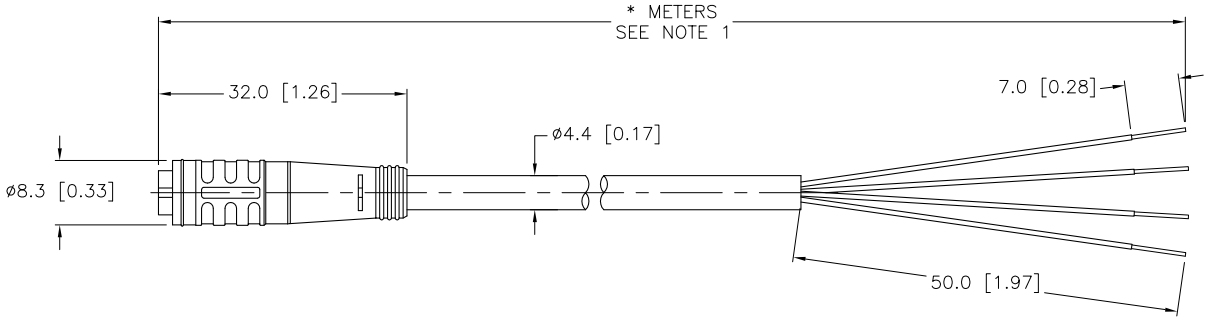

CABLE LENGTH	TOLERANCE
ALL LENGTHS	+ 4% (OR 50mm) OF LENGTH − 0% (OR 0mm) OF LENGTH WHICHEVER IS GREATER
STRIP LENGTH	**TOLERANCE**
0−7mm	±0.5mm
8−29mm	±1.0mm
30−49mm	±2.0mm
50−69mm	±3.0mm
70−100mm	±4.0mm
OVER 100mm	±5.0mm

NOTES:

1. "*" INDICATES CABLE LENGTH IN METERS. CONTACT TURCK TO ORDER SPECIFIC LENGTHS.

2. STRIP AND TIN LENGTHS ARE FOR REFERENCE ONLY; SOME LENGTHS MAY NOT BE STRIPPED AND TINNED.

SOURCE DRAWING - FOR REFERENCE ONLY

REV	DESCRIPTION	BY	DATE	ECO NO.
C	DRAWING PROCESSED AS PART OF ECO 33971	CBM	04/06/11	33971

RELATED DOCUMENTS
1.
2.
3.
4.

3RD ANGLE PROJECTION

THIS DRAWING IS PROPERTY OF TURCK INC. USE OF THIS DOCUMENT WITHOUT WRITTEN PERMISSION IS PROHIBITED.

TURCK INC
High Technology Sensors and Automation Controls

3000 CAMPUS DRIVE
MINNEAPOLIS, MN 55441
1−800−544−7769
(763) 553−7300
(763) 553−0708 fax
turck.com

MATERIAL: SEE SPECIFICATIONS

FINISH: SEE SPECIFICATIONS

ALL DIMENSIONS DISPLAYED ON THIS DRAWING ARE FOR REFERENCE ONLY

CONTACT TURCK FOR MORE INFORMATION

DRFT: JBJ | DATE: 11/01/01
DSGN | SCALE: 1=1.0

UNIT OF MEASUREMENT
MILLIMETER [INCH]
DO NOT SCALE THIS DRAWING

DESCRIPTION: PKG 4−*

IDENTIFICATION NO.

REV: C

FILE: 777000479

SHEET 1 OF 1