THIS DRAWING IS UNPUBLISHED. RELEASED FOR PUBLICATION -,- .
© COPYRIGHT - By - ALL RIGHTS RESERVED.

| LOC | DIST |
|---|---|
| GP | 00 |

REVISIONS

| P | LTR | DESCRIPTION | DATE | DWN | APVD |
|---|---|---|---|---|---|
| | K3 | REVISED PER ECO-11-004835 | 11MAR11 | RK | HMR |

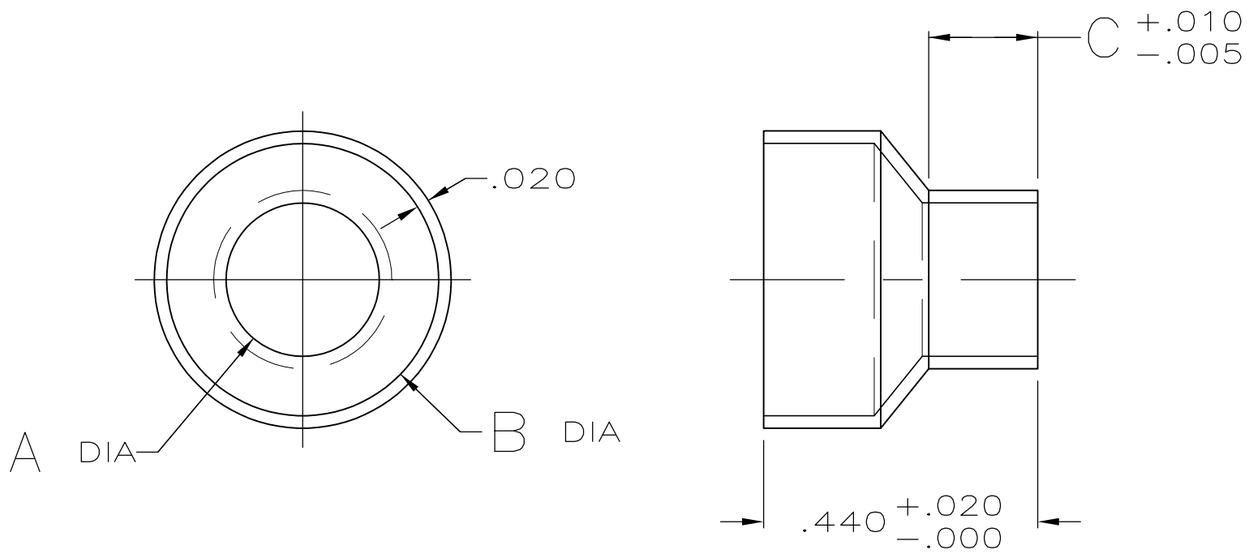


STYLE I (STEPPED)

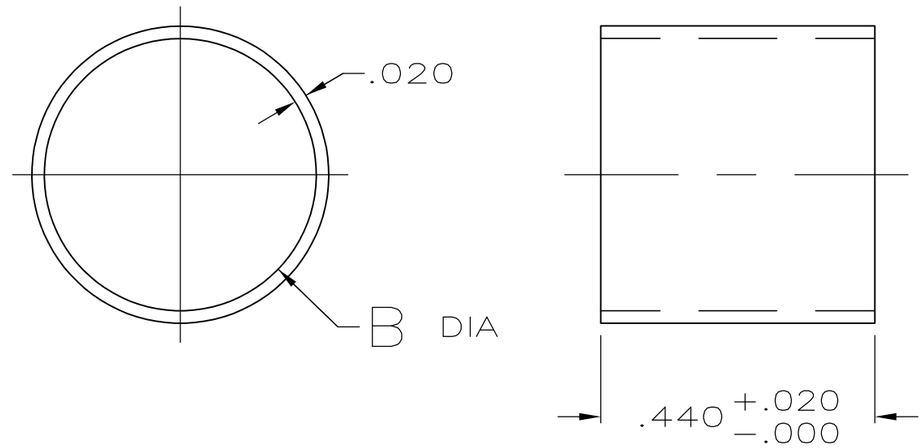


STYLE II (STRAIGHT)

| | FINISH | STYLE | INSULATION RANGE DIAMETER, REF | C | B | A | PART NUMBER |
|---|---|---|---|---|---|---|---|
| | 2 | I I | .460-.400 | - | .460 | - | 3-747579-6 |
| | 2 | I | .375-.324 | .175 | .437 | .375 | 3-747579-4 |
| | 2 | I | .324-.246 | .175 | .437 | .324 | 3-747579-2 |
| | 2 | I | .246-.165 | .175 | .437 | .246 | 3-747579-0 |
| | 2 | I I | .437-.375 | - | .437 | - | 2-747579-7 |
| OBSOLETE | 1 | I I | .460-.400 | - | .460 | - | 1-747579-4 |
| OBSOLETE | 1 | I I | .437-.375 | - | .437 | - | 1-747579-2 |
| OBSOLETE | 1 | I | .375-.324 | .175 | .437 | .375 | 1-747579-1 |
| OBSOLETE | 1 | I | .324-.246 | .175 | .437 | .324 | 1-747579-0 |
| OBSOLETE | 1 | I | .246-.165 | .175 | .437 | .246 | 747579-8 |

1 .000200 MIN BRIGHT TIN-LEAD OVER .000100 MIN COPPER.
2 .000200 MIN BRIGHT TIN OVER .000100 MIN COPPER.

THIS DRAWING IS A CONTROLLED DOCUMENT.

DIMENSIONS: INCHES

TOLERANCES UNLESS OTHERWISE SPECIFIED:
0 PLC ± -
1 PLC ± -
2 PLC ± -
3 PLC ± .005
4 PLC ± -
ANGLES ± -

MATERIAL: STEEL, ANNEALED

FINISH: SEE TABLE

DWN B. MCMASTER 21MAY04
CHK J. GERACE 21MAY04
APVD M. WALMSLEY 21MAY04
PRODUCT SPEC —
APPLICATION SPEC —
WEIGHT —

TE Connectivity

NAME: FERRULE, OUTER, SIZES 1 THRU 3, SHIELDING HARDWARE, AMPLIMITE ®

| SIZE | CAGE CODE | DRAWING NO | RESTRICTED TO |
|---|---|---|---|
| A3 | 00779 | C-747579 | — |

CUSTOMER DRAWING | SCALE 4:1 | SHEET 1 OF 1 | REV K3