THIS DRAWING IS UNPUBLISHED. RELEASED FOR PUBLICATION -,- .
© COPYRIGHT - By - ALL RIGHTS RESERVED.

LOC	DIST
G	14

REVISIONS

P	LTR	DESCRIPTION	DATE	DWN	APVD
	C2	REVISED PER ECO-13-015090	25SEP2013	KH	DR

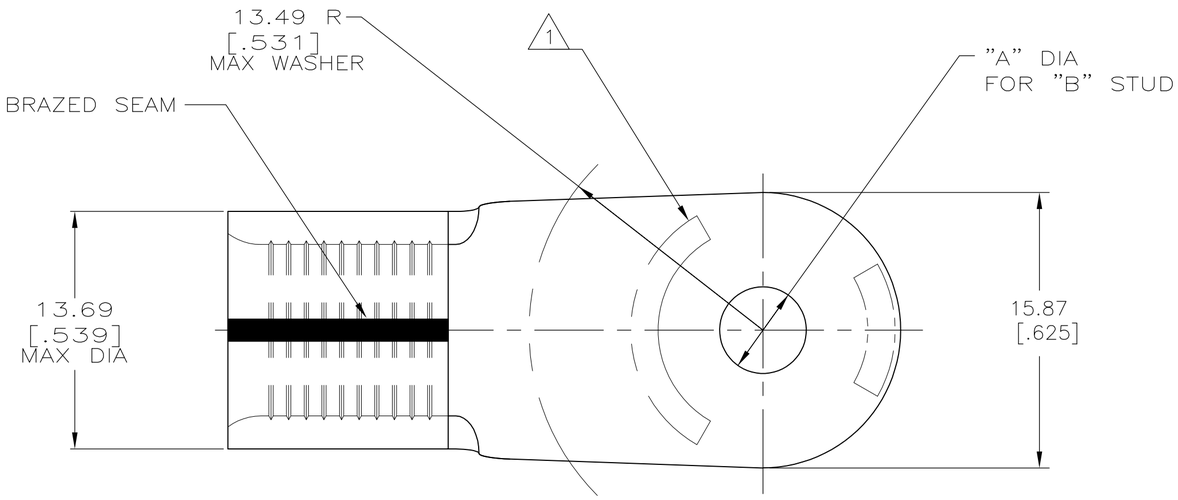

AMP WIRE RANGE	E13288 Listed
2 AWG SOLID OR STRANDED	2 AWG STRANDED
LR7189 Certified	MILITARY P/N AND CLASS
2 AWG SOLID OR STRANDED	MS 20659-146 CLASS 2 (5)

(1) STAMP AMP 2W* 60-75 APPROX AS SHOWN

(2) TIN PLATE 0.00254[.000100] MIN EXT THK PER ASTM B545.

(3) GOLD PLATE 0.00127[.000050] MIN THK PER MIL-DTL-45204 OVER NICKEL PLATE 0.00076[.000030] MIN THK PER SAE AMS QQ-N-290

(4) TIN PLATE 0.00254[.000100]MIN EXT THK (WHISKER MITIGATED, LEAD FREE) PER ASTM B545.

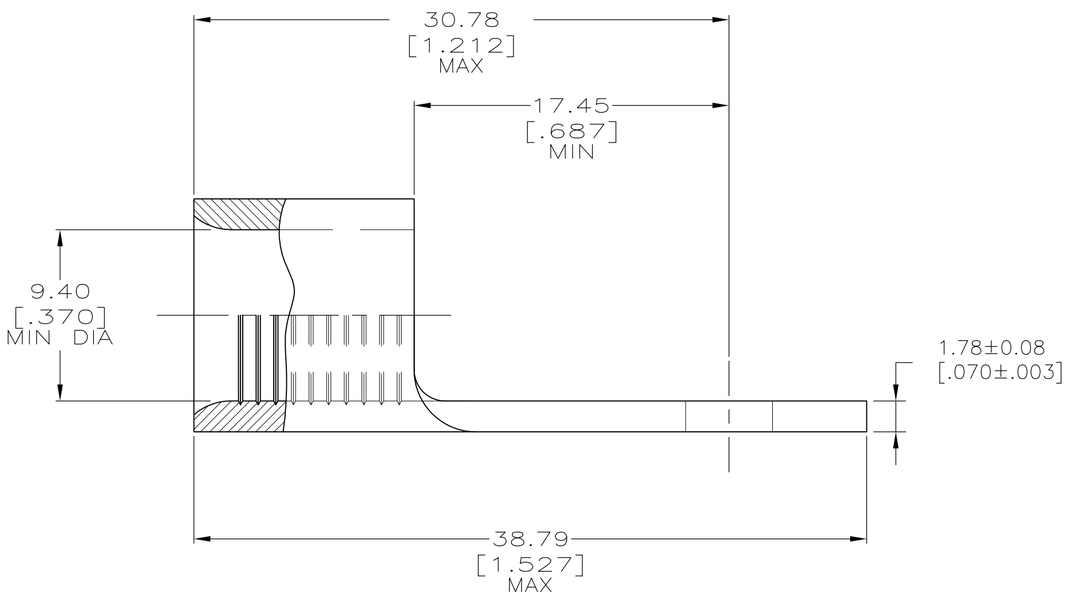

M5	5.20±0.08 [.205±.003]	170°C[338°F] MAX	(4)	330301-3
#10	5.00±0.08 [.197±.003]	260°C[500°F] MAX	(3)	330301-2
		170°C[338°F] MAX	(2)	(5) 330301
"B" STUD	"A"DIA	TEMPERATURE RATING	FINISH	PART NO

330301

AMP INCORPORATED CUSTOMER SERVICE SYSTEMS

FOR ADDITIONAL PRODUCT INFORMATION OR COPIES OF DRAWINGS AND TECHNICAL DOCUMENTS	PRODUCT INFORMATION CENTER 1-800-522-6752	MAX RECOMMENDED OPERATING TEMPERATURE: SEE TABLE
FOR APPLICATION TOOLING INFORMATION	TOOLING ASSISTANCE CENTER 1-800-722-1111	VOLTAGE RATING: NOT APPLICABLE
FOR ORDER ENTRY	1-800-526-5142	CIRCULAR MIL AREA: 26.7-42.4mm² [52,600-83,700]CIR MILS SOLID OR STRANDED

THIS DRAWING IS A CONTROLLED DOCUMENT.

DIMENSIONS: mm [INCHES]

TOLERANCES UNLESS OTHERWISE SPECIFIED:
0 PLC ± -
1 PLC ± -
2 PLC ± 0.20[.008]
3 PLC ± -
4 PLC ± -
ANGLES ± -

MATERIAL: COPPER PER ASTM B-152 ANNEALED

FINISH: SEE TABLE

DWN	DK SCHRUM	04AUG94
CHK	AJ KAUFMAN	08AUG94
APVD	RE ROSER	08AUG94
PRODUCT SPEC	—	
APPLICATION SPEC	—	
WEIGHT	—	

TE Connectivity

NAME: TERMINAL, RING TONGUE, SOLISTRAND™

SIZE	CAGE CODE	DRAWING NO	RESTRICTED TO
A2	00779	C-330301	—

CUSTOMER DRAWING | SCALE 4:1 | SHEET 1 OF 1 | REV C2

1471-9 (3/11)