THIS DRAWING IS UNPUBLISHED. RELEASED FOR PUBLICATION 2000
© COPYRIGHT 2000 BY TYCO ELECTRONICS CORPORATION. ALL RIGHTS RESERVED.

LOC	DIST
A1	-

REVISIONS

P	LTR	DESCRIPTION	DATE	DWN	APVD
	B4	ECR-10-017493	01.02.11	SR	AR

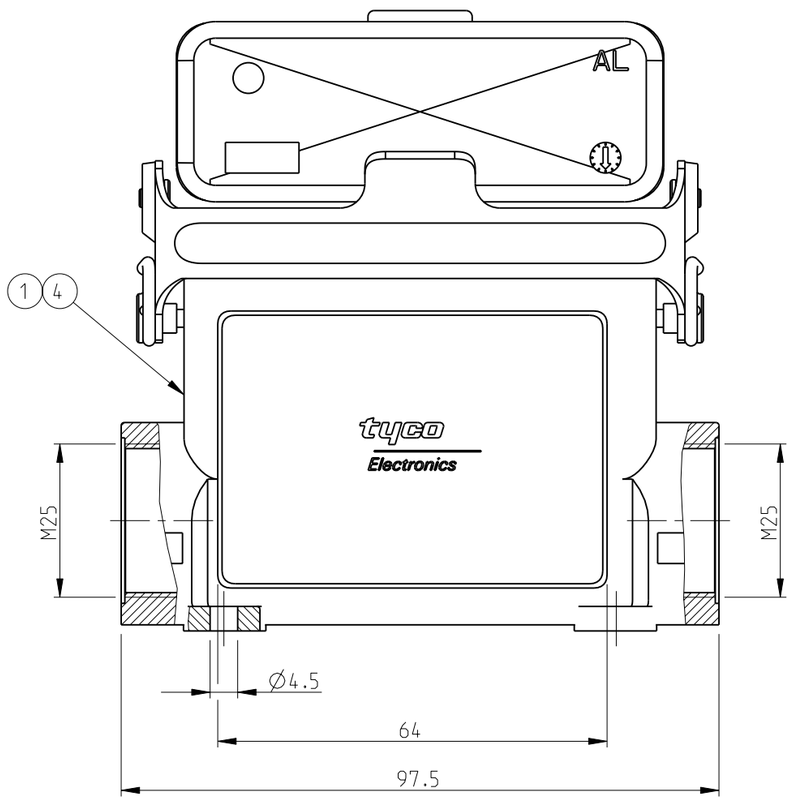

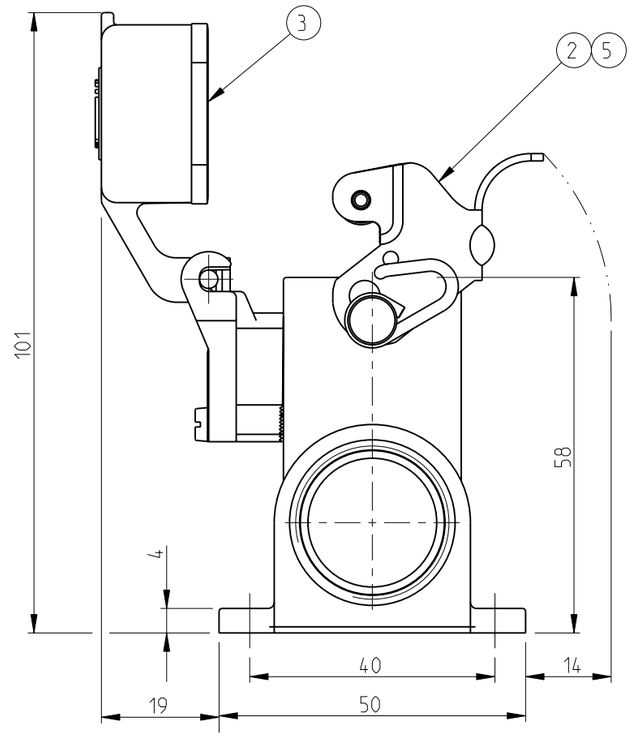

NOTES:

1. MATERIAL: SEE TABLE
2. SURFACE: SEE TABLE
3. VARNISH ON THE INSIDE NOT NECESSARY
4. PACKAGING QAUNTITY: 5 PIECES PER BOX
5. SPECIAL PACKING

PN 0-2, 0-5 & 1-2 (WITHOUT COVER)

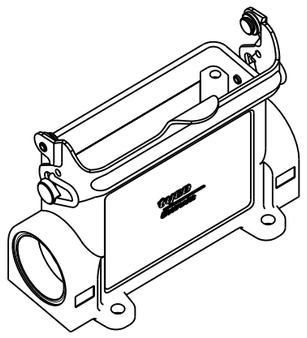

SCALE 1:2

PN 0-1 (WITH COVER)

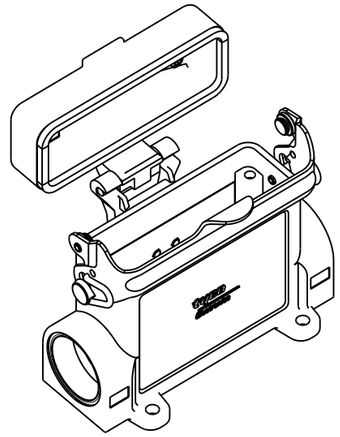

SCALE 1:2

1-2	0-5	0-2	0-1	DESCRIPTION	MATERIAL	SURFACE	COLOR	ITEM NO.	REMARKS
				CLIP	STAINLESS STEEL	BLANK	-	5	
				SURFACE MOUNTED HOUSING-SIDE ENTRY HD-K	ALUMINIUM	ALUMINIUM OXIDE	BLACK	4	
-	-	-	1	COVER	ALUMINIUM	-	GREY	3	
-	1	1	1	CLIP	STEEL	ZINC PLATED	BLUE	2	
-	1	1	1	SURFACE MOUNTED HOUSING-SIDE ENTRY HD	ALUMINIUM	-	GREY	1	

ORDERING TEXT

~~HD25.SGD-LB.2.M25.Z~~ — OBSOLETE

HD25.SG-LB.2.M25.Z

HD25.SG-LB.2.M25.Z.KM

HD-K.25.SG-LB.1.M25.Z

THIS DRAWING IS A CONTROLLED DOCUMENT FOR TYCO ELECTRONICS CORPORATION. IT IS SUBJECT TO CHANGE AND THE CONTROLLING ENGINEERING ORGANIZATION SHOULD BE CONTACTED FOR THE LATEST REVISION.

DIMENSIONS: mm

TOLERANCES UNLESS OTHERWISE SPECIFIED: n.ISO 8015: n.ISO 2768-mH-E: n.DIN 16901-120

0 PLC	±
1 PLC	±
2 PLC	±
3 PLC	±
4 PLC	±
ANGLES	±

MATERIAL 1

FINISH 2

DWN	S.KUMAR	4/24/2006
CHK	P.BENNUR	4/24/2006
APVD	T.SCHNURPFEIL	4/24/2006
PRODUCT SPEC	108-74009	
APPLICATION SPEC	114-74004	
WEIGHT	-	

Tyco Electronics

Tyco Electronics,AMP,GmbH
53757,SanktAugustin,Germany

NAME
SURFACE MOUNTED HOUSING SIDE ENTRY
HD25.SG/SGD-LB.2.M25.Z

SIZE	CAGE CODE	DRAWING NO	RESTRICTED TO
A3	00779	C-1106441	-

CUSTOMER DRAWING | SCALE 1:1 | SHEET 1 OF 1 | REV B4

AMP 1470-19 REV 31MAR2000

Pro/ENGINEER DRAWING