KEMET Part Number: ESC687M010AH1AA

Capacitor, aluminum, 680 uF, +/-20% Tol, -40/+105C, 10 VDC@105C

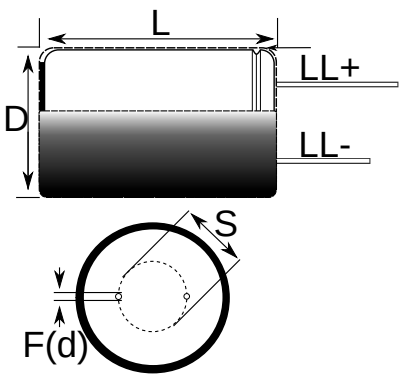

Note: '()' correspond to the letters used in the product bulletin

General Information	
Supplier:	KEMET
Application:	105C Low Z
Part Type Description:	Low ESR Single Ended Aluminum Electrolytic
Lead Type:	Wire Leads
RoHS:	Yes

Dimensions (mm)		
Symbol	Dimension	Tolerance
D	10	+/-0.5
L	12	+1.5
S	5	+/-0.5
LLPos	20	MIN
LLNeg	15	MIN
F	0.6	NOM

Specifications	
Capacitance:	680 uF
Voltage:	10 VDC
Tolerance:	+/-20%
Voltage:	13 VDC (Surge)
Life:	2000 Hrs
Rated Temperature:	105C
Temperature Range:	-40/+105C
Leakage Current:	68 uA
Leakage Condition:	2Min/20C
Dissipation Factor:	14%
Impedance Ratio -40C:	8.0
Resistance/ESR:	0.085 Ohms (100kHz)
Current/Ripple Current:	800 mAmps (100kHz 105C)

Packaging Specifications	
Package Kind:	Bulk
Package Type:	Bag
Package Quantity:	4000

Statements of suitability for certain applications are based on our knowledge of typical operating conditions for such applications, but are not intended to constitute - and we specifically disclaim - any warranty concerning suitability for a specific customer application or use. This Information is intended for use only by customers who have the requisite experience and capability to determine the correct products for their application. Any technical advice inferred from this Information or otherwise provided by us with reference to the use of our products is given gratis, and we assume no obligation or liability for the advice given or results obtained.

© 2006-2015 IntelliData.net