PART NO. SEE CHART
DWG. NO. SD-90156

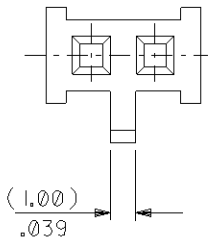

2 & 3 CIRCUITS

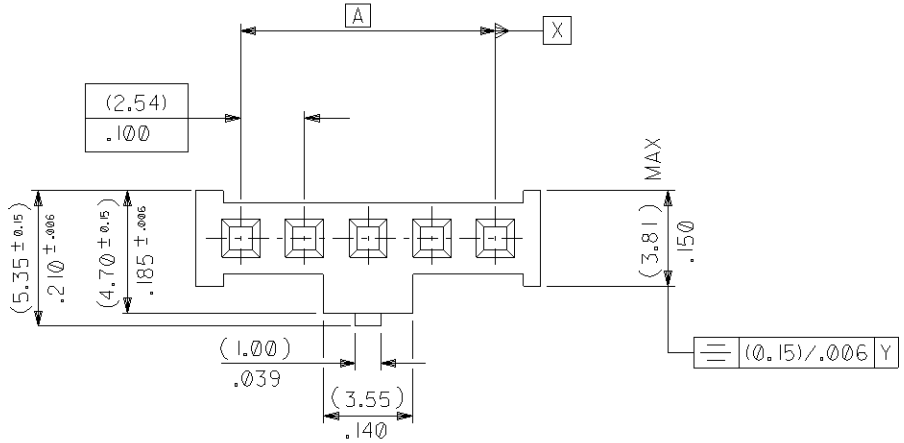

4 TO 32 CIRCUITS

No. OF CKTS	PART NUMBER	DIM A	DIM B
2	-0142	(2.54)/ .100	(6.14)/ .342
3	-0143	(5.08)/ .200	(8.68)/ .342
4	-0144	(7.62)/ .300	(11.22)/ .442
5	-0145	(10.16)/ .400	(13.76)/ .542
6	-0146	(12.70)/ .500	(16.30)/ .642
7	-0147	(15.24)/ .600	(18.84)/ .742
8	-0148	(17.78)/ .700	(21.38)/ .842
9	-0149	(20.32)/ .800	(23.92)/ .942
10	-0150	(22.86)/ .900	(26.46)/1.042
11			
12	-0152	(27.94)/1.100	(31.54)/1.242
13	-0153	(30.48)/1.200	(34.08)/1.342
14	-0154	(33.02)/1.300	(36.62)/1.442
15	-0155	(35.56)/1.400	(39.16)/1.542
16	-0156	(38.10)/1.500	(41.70)/1.642
17			
18	-0158	(43.18)/1.700	(46.78)/1.842
19			
20	-0160	(48.26)/1.900	(51.86)/2.042
21			
22	-0162	(53.34)/2.100	(56.94)/2.242
23			
24			
25	-0165	(60.96)/2.400	(64.56)/2.542
26			
27			
28			
29			
30	-0170	(73.66)/2.900	(77.26)/3.042
31			
32	90156-0172	(78.74)/3.100	(82.34)/3.242

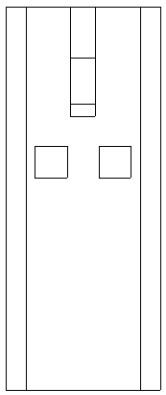

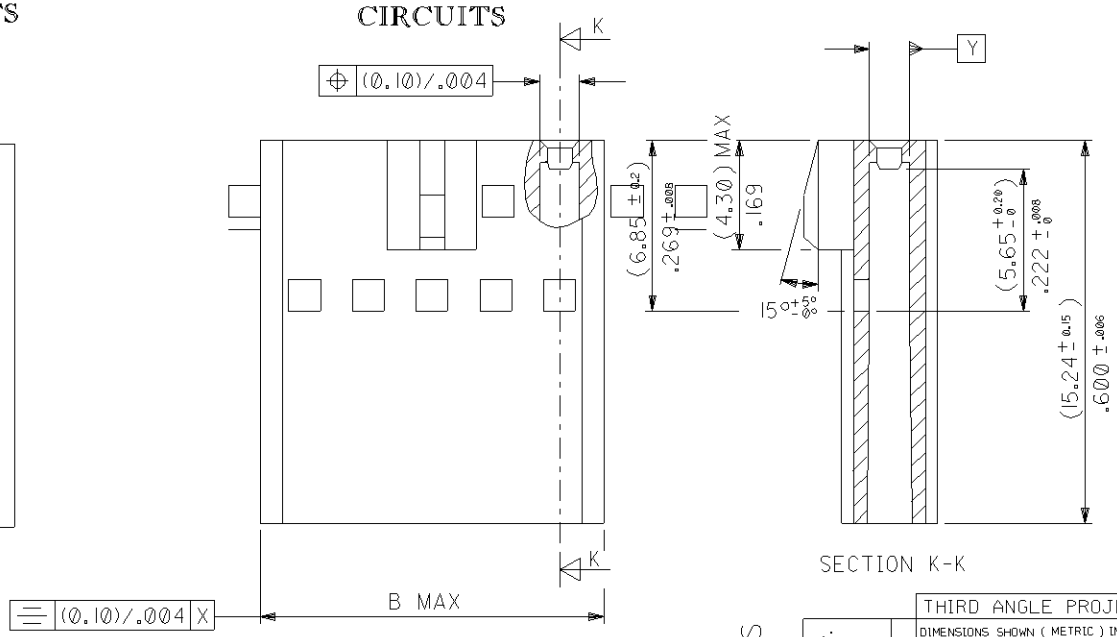

SECTION K-K

NOTES

1. MATERIAL:-
   - POLYPHENYLENE OXIDE.
   - UL 94 V-1 COLOUR BLACK

FOR PREVIOUS DRAWING ISSUES SEE MR1.

LTR	REVISIONS
L	CORRECT STANDOFF VW. ECN : E30200 93.MAY.27 BGB

THIRD ANGLE PROJECTION

DIMENSIONS SHOWN (METRIC) INCH

UNLESS OTHERWISE SPECIFIED TOLERANCES: ANGULAR ± 2°

	INCH	(METRIC)
3 PLACE	± .004	
2 PLACE	± .---	± 0.10
1 PLACE		± ---

DRAFT WHERE APPLICABLE MUST REMAIN WITHIN DIMENSIONS

DESIGN DIMENSION (PRIMARY) ☒ (MM) ☐ IN.

EQUIVALENT DIMENSION (SECONDARY) ☐ (MM) ☒ IN.

DRWG BY KS
CHK'D BY
APP'D BY
SCALE 5:1

REVISE ONLY ON CAD SYSTEM | SH. | REV.

CADCAM FILENAME SD90156X1 DON

THIS DRAWING CONTAINS INFORMATION THAT IS PROPRIETARY TO MOLEX INC. & SHOULD NOT BE USED WITHOUT WRITTEN PERMISSION

TITLE
C-GRID III
SINGLE ROW CRIMP
CONNECTOR HOUSING

molex MOLEX EUROPE

SHEET NO. 1 OF 1 | DATE 8/ 9/87

PART NO. SEE CHART | DWG NO. SD-90156 | SIZE B

7132-1283

c:\work\b29515t9\sd90156x1.dgn May. 12, 1999 15:10:35