WIRING DIAGRAM

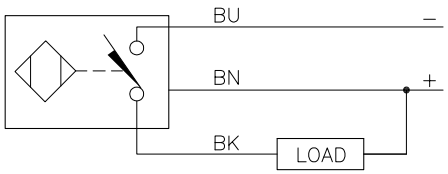

OUTPUT: AN5X

LOCKNUT LN–M18

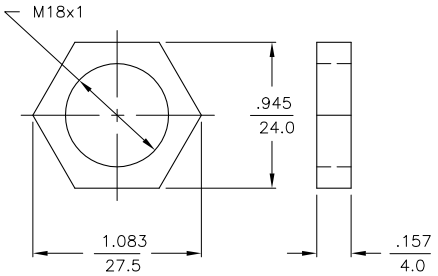

SPECIFICATIONS

RATED OPERATING DISTANCE	10mm [.394"]
MOUNTING MODE	NON–FLUSH
HYSTERESIS (DIFFERENTIAL TRAVEL)	1–10%
MIN. REPEAT ACCURACY	≤ 2%
TEMPERATURE DRIFT	≤ ± 10% ≤ ± 20%, ≤ –25°C v ≥ +70°C
OPERATING TEMPERATURE	–40°C to +70°C (–40°F to +158°F)
RATED OPERATIONAL VOLTAGE	4.75–5.25 VDC
MAX. RIPPLE	≤ 10%
DC RATED OPERATIONAL CURRENT	≤ 50 mA
NO–LOAD CURRENT	≤ 6 mA
OFF–STATE CURRENT	≤ 0.1 mA
RATED INSULATION VOLTAGE	≤ 0.5 kV
SHORT–CIRCUIT PROTECTED	NO
MAX. VOLTAGE DROP	≤ 0.1 V
REVERSE POLARITY PROTECTION	CONDITIONAL (PLUS + MINUS)
WIRE–BREAK PROTECTION	INCORPORATED
OUTPUT FUNCTION	3–WIRE, NORMALLY OPEN, NPN
MAX. SWITCHING FREQUENCY	≤ 0.5 kHz
HOUSING MATERIAL	METAL, BRASS/CHROME–PLATED
ACTIVE FACE	PLASTIC, PA12–GF20
END CAP MATERIAL	PLASTIC, EPTR
CABLE	ø5.9, LifYY–11Y, TPU/YELLOW
SHOCK RESISTANCE	30 g, 11 ms
VIBRATION RESISTANCE	55 Hz, 1 mm AMPLITUDE (IN ALL 3 PLANES)
DEGREE OF PROTECTION	IP67
SWITCHING STATUS INDICATION	LED, YELLOW

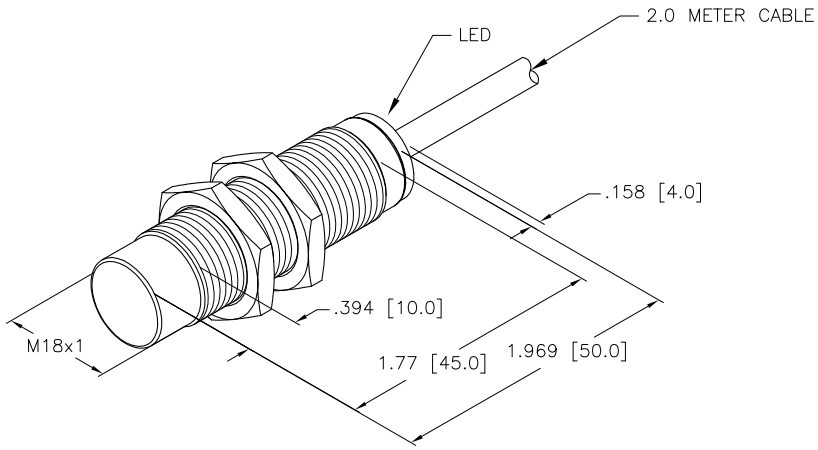

CABLE LENGTH	TOLERANCE
ALL LENGTHS	+ 4% (OR 50mm) OF LENGTH – 0% (OR 0mm) OF LENGTH WHICHEVER IS GREATER
STRIP LENGTH	**TOLERANCE**
0–7mm	±0.5mm
8–29mm	±1.0mm
30–49mm	±2.0mm
50–69mm	±3.0mm
70–100mm	±4.0mm
OVER 100mm	±5.0mm

NOTES:

1. "/CS11591" DESIGNATES SPECIAL BRAIDED, SHIELDED TPU CABLE USED. LOW OPERATING TEMPERATURE: –40°C.

2. INCLUDES WRAP LABEL WITH MDT PART NUMBER: 40224447–001

SOURCE DRAWING - FOR REFERENCE ONLY

REV	DESCRIPTION	BY	DATE	ECO NO.
B	DRAWING PROCESSED AS PART OF ECO 33971	CBM	04/06/11	33971

RELATED DOCUMENTS
1.
2.
3.
4.

3RD ANGLE PROJECTION

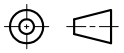

TURCK INC
High Technology Sensors and Automation Controls

3000 CAMPUS DRIVE
MINNEAPOLIS, MN 55441
1–800–544–7769
(763) 553–7300
(763) 553–0708 fax
turck.com

MATERIAL

FINISH

ALL DIMENSIONS DISPLAYED ON THIS DRAWING ARE FOR REFERENCE ONLY

CONTACT TURCK FOR MORE INFORMATION

DRFT RDS | DATE 06/22/10
DSGN | SCALE 1=1.3

UNIT OF MEASUREMENT
INCH [MILLIMETER]
DO NOT SCALE THIS DRAWING

DESCRIPTION
NI10–M18–AN5X/CS11591

IDENTIFICATION NO. T1510690
REV B

FILE: T1510690
SHEET 1 OF 1