NO	DESCRIPTION	DATE
1	11.7 MIN. — 11.7 $^{+0.1}_{-0.05}$ ADD REMARK	03.05.08'
2	MODIFY ELECTRICAL SCHEME	11.12.08'
3	CECC 22000 — BS EN 122340 -65°C TO +165° C — -55°C TO+155° C	11.09.09'

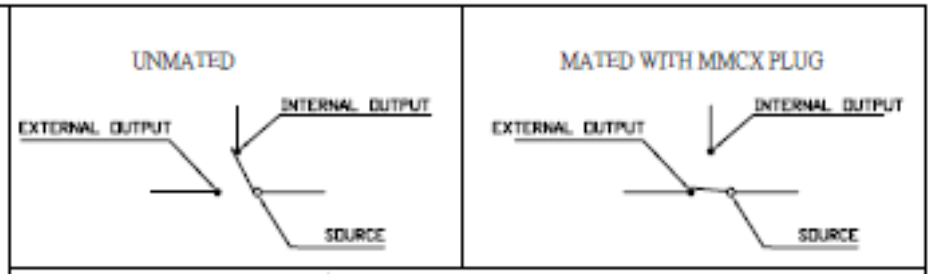

2 ELECTRICAL SCHEME

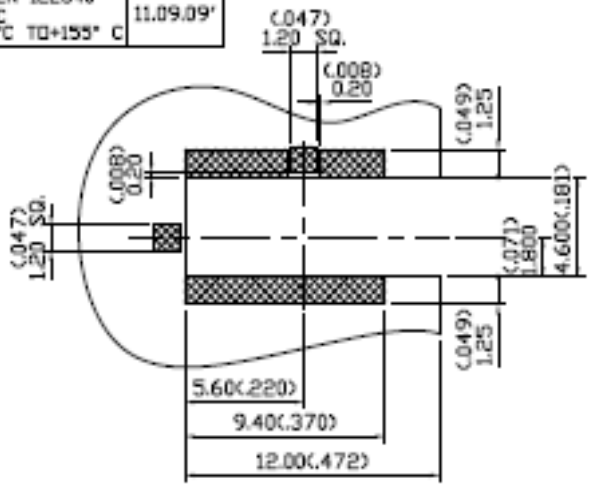

SCALE 4:1

RECOMMENDED PCB LAYOUT

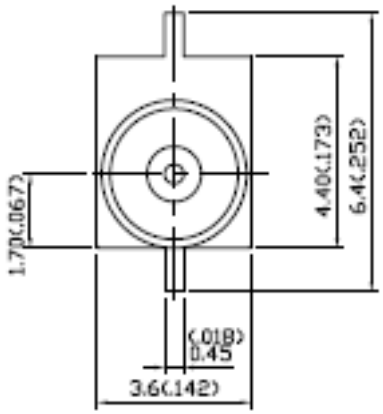

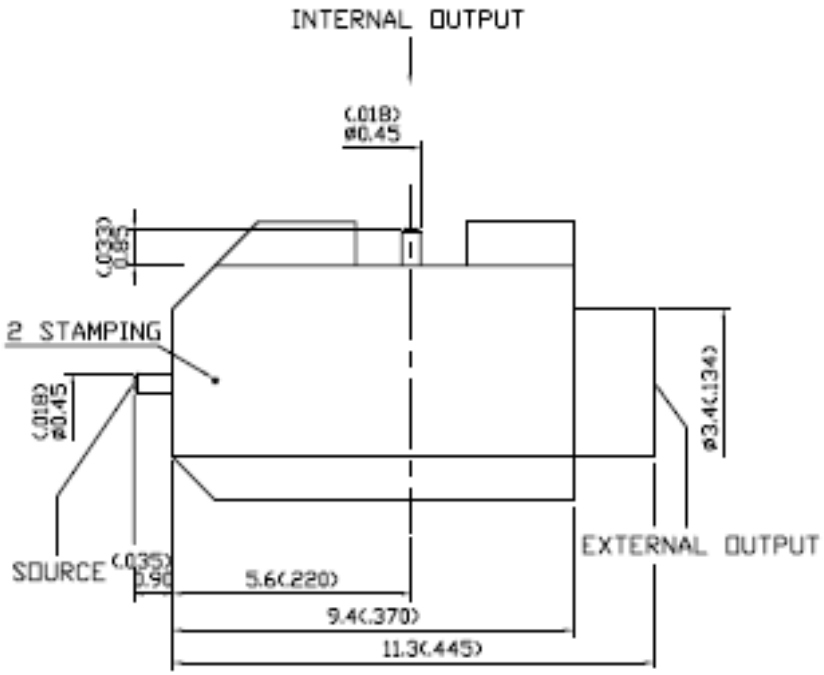

1.0 ELECTRICAL

1.1 FREQUENCY RANGE: DC–3 GHz INTERNAL
DC–8.5 GHz EXTERNAL
1.2 NOMINAL IMPEDANCE: 50 OHMS
1.3 WORKING VOLTAGE: 170 VOLTS MAX.
1.4 PROOF VOLTAGE: 500 VOLTS
1.5 VSWR: 1.5 MAX.

2.0 MATERIALS

2.1 BODIES: BRASS PER JIS–C3604
2.2 CENTER CONTACT: BERYLLIUM COPPER PER ASTM B196 UNS C17300
2.3 INSULATION: TEFLON PER ASTM D1457 AND ASTM D1710

3.0 FINISHES AND OTHERS

3.1 SEE BELOW TABLE FOR DETAILS.

4.0 MECHANICAL

4.1 INTERFACE IN ACCORDANCE WITH: BS EN 122340 3

5.0 ENVIRONMENTAL

5.1 OPERATING TEMPERATURE RANGE: –55° C TO +155° C 3

NO	DESCRIPTION	MATERIAL	Q'TY	FINISH
8	BODY	BRASS	1	GOLD 3μ" MIN.
7	INSULATION III	TEFLON	1	NONE
6	INSULATION II	TEFLON	1	NONE
5	CENTER CONTACT III	BRASS	1	GOLD 3μ" MIN.
4	CENTER CONTACT II	BERYLLIUM COPPER	1	GOLD 30μ" MIN.
3	SPRING	STAINLESS STEEL	1	NONE
2	CENTER CONTACT I	BRASS	1	GOLD 3μ" MIN.
1	INSULATION I	TEFLON	1	NONE

APPROVED by _____ DATE: _____

DESCRIPTION	MMCX STRAIGHT EDGE MOUNT JACK SWITCHING								
製圖	DRAWN Yoko	TOLERANCE		品名 TITLE	37-18 T.G.G \ROHS COMPLIANT (500)	日期	DATE 06.23.07'	版次	REV. A-3
檢圖	CHECK Arc	.X	±0.2	單位	UNIT mm(in)	DWG.NO.	37-0065		
		.XX	±0.1						
認定	APPROVAL Lewis	.XXX	±0.05	比例	SCALE 7:1				
		ANGLE	±5°						