Definitions

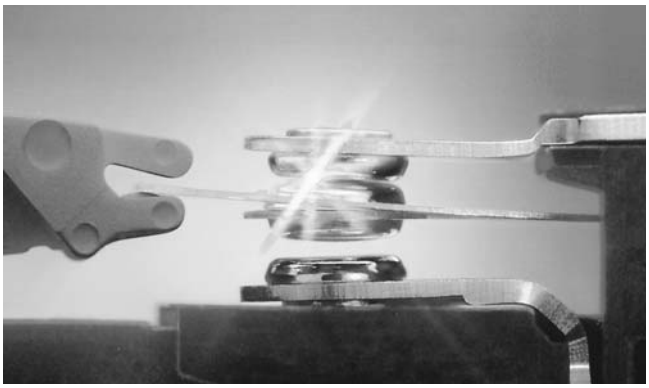

Definitions

Definitions . . . . . .page 2
Processing information . . . . . .page 13
Application information . . . . . .page 14
Safety Relays / Definitions . . . . . .page 15

Dimensions are in mm unless otherwise specified and are shown for reference purposes only.

Product data, technical parameters, test conditions and processing information according to IEC 61810-1 and as specified in this 'Definitions' section or at schrackrelays.com in the 'Schrack' section.

Definitions and specifications subject to change.

Definitions

Technical data
Unless otherwise stated, the stated technical data are based on laboratory tests under standardized conditions and are within the conditions of normal use for these components. The vast number of influencing factors does not allow to test our products for all imaginable applications and processes. The decision on the suitability of a specific component is the solely responsibility of the user. To ensure the suitability of the product for a specific application the user has to test these products before the use under the most stringent conditions they will be exposed to in the actual application.

All product data are intended for users with knowledge and experience in the application of such specifications. The utilization is at the risk of the user, existing regulations and standards have to be taken into consideration.

Specification
In order to improve the performance and quality we continuously develop our products. We reserve the right to change technical parameters and product specification without prior notice. With the technical data listed are for description purposes of the components only and are not an agreement and do not guarantee specific characteristics and parameters; for detailed questions please contact our application support. Drawings, photos data and descriptions are subject to change without prior notice.

Availability
The ordering code structure does allow a large number of possible variantions, but not all possible variations are defined as standard types in the current product portfolio (ordering codes) and thus may not be included in the product range. Special versions to customer specifications can be supplied. Please contact your local sales organisation.
Right to change the availability and delivery conditions reserved.

AC
Pertaining to alternating quantities such as voltage or current, to devices operated with these, or to quantities associated with these devices. If not otherwise stated the indicated data is given for 50 Hz.

AC-coil
Relays for direct energization with AC supply. If not otherwise stated the data is given for 50 Hz supply.

Adjacent contact circuits
Insulation parameters between two adjacent contact circuits, which do not have a conductive connection. The level of insulation depends on the design and rated voltage.

Ambient temperature
The temperature in the vicinity of the relay.The minimum ambient temperature is the miniumum operating temperature, the maximum ambient temperature is the maximum operating temperature for the use of the relay or accessory. This temperature range should not be exceeded. Ambient temperature range according to IEC 61810-1 and indicated in °C.

Approvals
With the approval label the independent approval agency and/or test house confirms the compliance with the relevant product standards and/or certain product characteristics.

NOTE: the ordering code structure does allow a large number of possible variations, but not all variations are defined as standard types (ordering codes) and thus some relays may not be included in the list of approved relays. Technical data and approved types on request.

	BEAB	British Electrotechnical Approvals Board, England
	CSA	Canadian Standards Association, Kanada
	DEMKO	Danmarks Elektriske Materielkontrol, Dänemark
	KEMA	Naamloze Vennootschap tot Keuring van Electrotechnische Materialien, Niederlande
	LLOYD's	Lloyd's Register of Shipping
	NEMKO	Norges Elektriske Materiellkontroll, Norwegen
	ÖVE	Österreichischer Verband für Elektrotechnik, Österreich
	SEMKO	Svenska Elektriska Materiellkontrollanstalten AB, Schweden
	FIMKO	Sähkötarkastuskeskus Elinspektionscentralen, Finnland
	SEV	Eidgenössisches Starkstrominspektorat, Schweiz
	TÜV	Technischer Überwachungs-Verein, Deutschland
	UL	Underwriters Laboratories, Inc., USA; UL Component Recognition Mark for the United States
	UL	UL Component Recognition Mark for Canada
	UL	UL Component Recognition Mark for the United States and Canada
	VDE	VDE-Prüfstelle, Deutschland (Gutachten mit Fertigungsüberwachung)

Definitions (Continued)

Basic insulation
Insulation applied to live parts to provide basic protection against electric shock.

Bifurcated contact
Contact with two simultaneously operating contact points. Bifurcated contacts increase the contact reliability considerably, especially when switching low currents and voltages (dry circuits).

Bistable Relay, switching characteristics
In a bistable relay, the contacts remain in the last switching position after the input voltage is disconnected.

Bistable, polarized relay
A polarized bistable relay adopts one switching position on energizing in a particular direction and the other switching position when the energizing is in the opposite direction. In a bistable relay with one winding, the opposite energizing is created by a voltage with opposite polarity being applied to the same winding.
In a bistable relay with two windings, the opposing energizing is created by a voltage being applied to the second winding with opposite winding sense.

Bistable, remanent relay (remanence relay)
A remanent, bistable relay which adopts a particular switching position following an energizing direct current in any direction and is then held in this position by the remanence in the magnetic circuit, i.e. through the magnetization of parts of the magnetic circuit. The contacts return to their original position following a small energizing current of limited amplitude of the opposite polarity. This demagnetises the magnetic circuit.

Bounce
An unintentional phenomenon that can occur during the making or breaking of a contact circuit when the contact elements touch successively and separate again before they have reached their final position.

Bounce time
The time (typical value) from the first to the last closing or opening of a relay contact. The indicated times are for energization with rated voltage, without any components in series or parallel to the coil, and at reference temperature.

Break contact
See > NC contact

Bridging contact
Compound contact with two simultaneously operating contacts connected in series by the design of the relay.

Category of protection (IEC 61810)
The ´Relay Technology Categories´ (IEC 61810) describe the degree of sealing of the relay case or its contact unit:

RT 0: unenclosed relay
Relay not provided with a protective case
RT I: dust protected relay
Relay provided with a case which protects its mechanism from dust
RT II: flux proof relay
Relay capable of being automatically soldered without allowing the migration of solder fluxes beyond the intended areas. These are the contacts, movable parts of the magnetic system and their immediate environment.
RT III: wash tight (washable) relay
Relay capable of being automatically soldered and subsequently undergoing a washing process to remove flux residues without allowing the ingress of flux or washing solvents.
The test to evaluate the sealing of the case for wash tight relays is performed according to the IEC 68-2-17, Qc test.

NOTE - Please refer to the 'Processing' section for additional information.
In service this type of relay is sometimes vented to the atmosphere after soldering or washing process; in this case the requirements with respect to clearances and creepage distances can change.

RT IV: sealed relay
RT V: hermetically sealed relay

Change-over contact
See > CO contact

Clearance distance
Shortest distance in air between two conductive parts or between a conductive part and the accessible surface of the relay.

CO contact
Compound contact consisting of a NO (make) contact and a NC (break) contact with a common terminal. On changing the switch position, the contact previously closed opens first followed by the closing of the contact that was previously open.
Note: in case of a switching arc the NO and NC contact may be temporarily electrically connected.

Coil data
The coil data is specified according to IEC 61810-1.
Unless otherwise indicated the data is given for ambient temperature 23°C, coil temperature equal to ambient temperature (cold coil, without preenergization), 50 Hz for AC supply, operative range class 2, mounting distance 'dense packing'.
A duty factor of 100% (permanently operated) is permissible.

Coil insulation system according to UL1446
These requirements cover test procedures to be used in the evaluation of electrical insulation systems intended for connection to branch circuits rated 600 volts or less. This standard refers to insulation systems and does not cover individual insulating materials.

Coil operatve range
curve 1: operate-/minimal voltage U_0 (without preenergization)
curve 2: operate-/minimal voltage U_1 (preenergized coil)
curve 3: maximum voltage at contact current = 0 A
curve 4: limiting voltage U_2 at rated contact current I_{rated}

Coil operating range DC

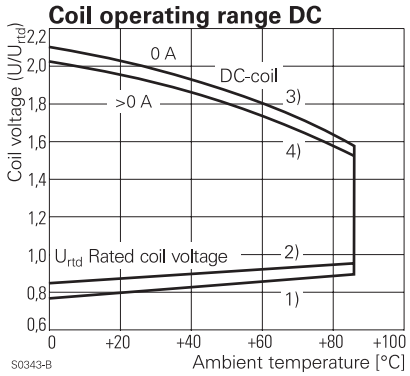

Definitions (Continued)

Coil operative range for bistable relays
curve 1: operate voltage at coil temperature equal to ambient temperature
curve 2: minimum reset voltage
curve 3: maximum operate voltage
curve 4: maximum reset voltage
For bistable relays, all curves are given for pulse energization (short energization duration)

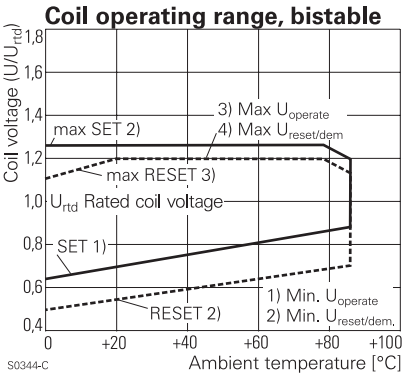

Coil power
Power consumption of the coil at rated coil voltage and coil resistance, given as typical value.

Coil resistance
Electrical resistance of the relay coil at reference temperature.

Coil-contact circuit data
Insulation parameters between the coil system and the contact circuit/system.

Contact bounce
See > Bounce

Contact configuration
According to the different switching functions of the relay contacts, the various contact configurations, design and description are specified in DIN 41020. See:
- NO contact
- NC contact
- CO contact
- Bridging contact

Contact	Reference D	GB	USA	Circuit diagr.
NO contact make cont.	1	A	SPST-NO	
NC contact break cont.	2	B	SPST-NC	
CO contact change-over c.	21	C	SPDT	
Bridging NO	1	X	SPST-NO	
Bridging NO/ Bridging NC		X	DM-DB	

Contact current
Electrical current which a relay contact carries before opening or after closing (rated current of the load).

Contact gap
Shortest distance between the open contact points.

Contact loading/schematic for contact loading
Single-pole contact

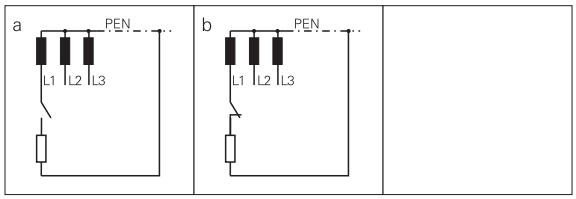

Double-pole contact

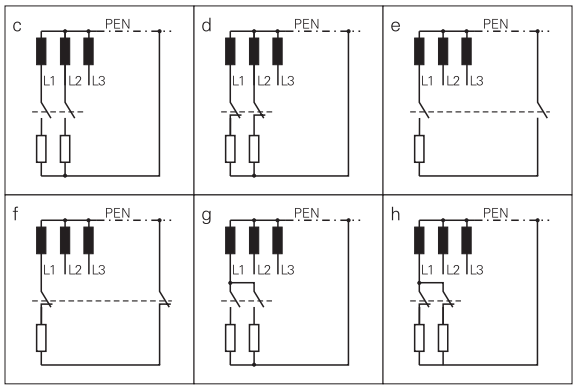

Multi-pole contact

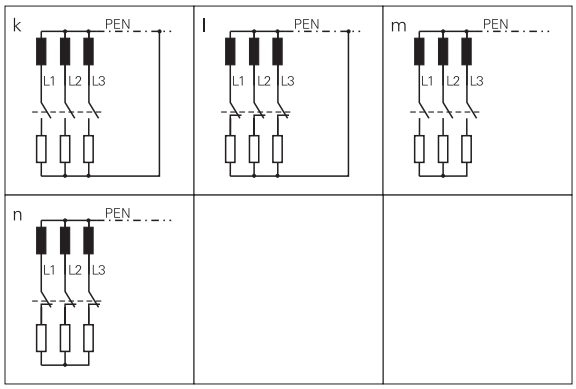

Dimensions are in mm unless otherwise specified and are shown for reference purposes only.
Product data, technical parameters, test conditions and processing information according to IEC 61810-1 and as specified in this 'Definitions' section or at schrackrelays.com in the 'Schrack' section.
Definitions and specifications subject to change.

Definitions (Continued)

Change-over contact

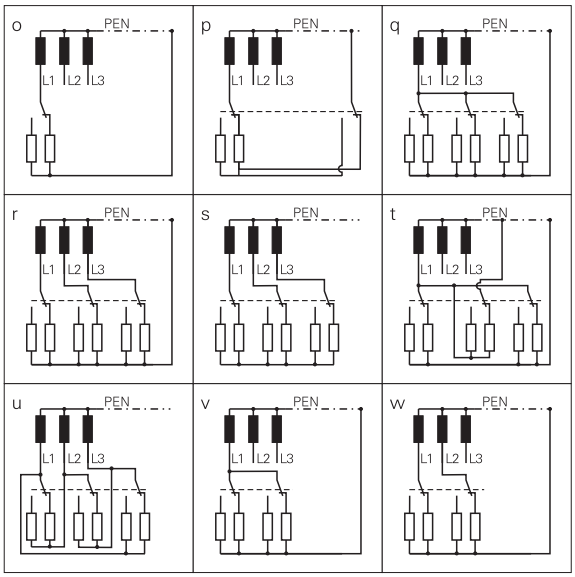

Contact material
The list gives an overview of the most important plating- and contact materials.The switching capacity of the contacts and the respective electrical endurance depends not only on the contact material but also to a high degree on the relay design. Decisive for the application therefore is the optimal combination of the mechanical system and the contact material. The characteristics for certain relay types cannot be transferred to other designs, neither can these values be used as given limits for existing products.

1) Plating materials:
Fine gold
- best corrosion resistance, not used as solid material because too soft, high tendency towards cold-welding
- gold platings 1 µm (hv), only as storage protection, no protection against aggressive atmosphere.

Hard gold plated (htv)
- very good corrosion resistance, low and stable contact resistance at lowest loads, low tendency to cold welding
- dry-circuit switching (switching without current/voltage), recommended range of application ≥ 1 V, 1 mA, 50 mW

2) Contact materials:
Silver-Nickel AgNi90/10
- high resistance against electrical wear, low welding tendency, higher contact resistance than AgNi0,15
- circuits with medium to high loads, DC- and AC-circuits, recommended range of application ≥ 12 V, 10 mA

Fine-grain silver AgNi0,15/AgNi0.15
- relatively low contact resistance, low resistance against aggressive atmosphere
- universally applicable in medium and low load range, especially in DC-circuits, recommended range of application ≥ 12 V, 10 mA

Silver-Tin-Oxide $AgSnO_2$
- low welding tendency, high wear resistivity with heavy loads, low material transfer
- circuits with high requirements to make- and break currents, DC- and AC loads, recommended range of application ≥ 12 V, 100 mA

Tungsten W
- highest melting point, for high switching rates and low ON-time
- as prerun contact in circuits with highest make loads

Silver-Cadmium-Oxide AgCdO
- low welding tendency, high wear resistance
- for switching of inductive loads, AC-circuits, ≥ 12 V, 100 mA

Contact ratings
See > Electrical Endurance

Contact resistance
Electrical resistance between the relay terminals of a closed contact, measured with indicated measuring current and indicated source voltage. The specified contact resistance is reached reliably only above a particular load. Considerably increased contact resistances can occur with smaller loads. After a prolonged period of a steady state operate/release position or storage of the relay a certain number of cycles are recommended before measurement of the contact resistance. According to IEC 61810-7 the following measurement parameters are applied (for general purpose relays category 3 is applicable):

	Load		Measurement	
Category	V	A	V	A
cat. 0	0.03	0.01	0.03	0.01
cat. 1	0.03...60	0.01...0.1	0.1	0.01
cat. 2	5...250	0.1...1	24	0.1
cat. 3	5...600	0.1...100	24	1.0

Contact set
See
- bridging contact
- forcibly guided contact
- pre-make contact
- single contact
- twin/bifurcated contact

Contact terminations (insulation)
Insulation parameters of the contact. In case of a micro-disconnection/functional insulation the clearance/creepage data reflect the outside of the relay, there are no dimensional requirements for the internal design of the contact system.

Contact terms

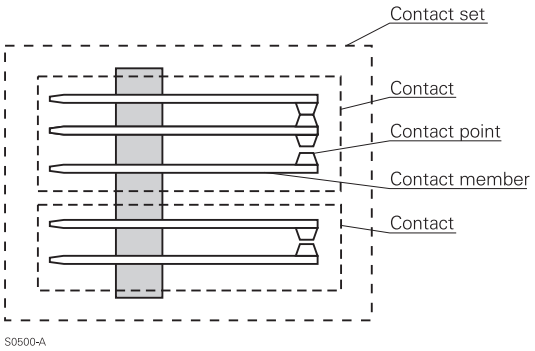

Definitions (Continued)

Contact type
See > Contact set

Creepage distance
Shortest distance along the surface of the insulating material between conductive parts according to IEC 61810-1.

CTI
See >Tracking index

Cycle
Operation and subsequent release/reset of a relay.

DC
Pertaining to time independent electric quantities such as voltage or current (DC refers to direct current).

Degree of protection (IEC 60529)
Degrees of protection provided by enclosures (IP Code) for electrical equipment.
This data is relevant for industrial relays and accessories. For relays as components (e.g. PCB relays) see > Category of protection.

Definition of degree of protection (IP code) IEC 60529 outlines an international classification system for the sealing effectiveness of enclosures of electrical equipment against the intrusion into the equipment of foreign bodies (i.e., tools, dust, fingers) and moisture. This classification system utilizes the letters IP (Ingress Protection) followed by two digits.

Degree of protection - First digit
The first digit of the IP code indicates the degree that connection is protected against contact with moving parts and the degree that equipment is protected against solid foreign bodies intruding into an enclosure.
0 No special protection
1 Protection from a large part of the body such as hand or from solid objects greater than 50 mm in diameter
2 Protection against objects not greater than 80 mm in length and 12 mm in diameter
3 Protection from entry by tools, wires, etc., with a diameter or thickness greater than 2.5 mm
4 Protection from entry by solid objects with a diameter or thickness greater than 1.0 mm
5 Protection from the amount of dust that would interfere with the operation of the equipment
6 Dust-tight

Degree of protection - Second digit
Second digit indicates the degree of protection of the equipment inside the enclosure against the harmful entry of various forms of moisture (e.g. dripping, spraying, submersion, etc.)
0 No special protection
1 Protection from vertically dripping water
2 Protection from dripping water when tilted up to 15°
3 Protection from sprayed water
4 Protection from splashed water
5 Protection from water projected from a nozzle
6 Protection against heavy seas, or powerful jets of water
7 Protection against temporary immersion
8 Protection against complete continuous submersion in water (up to 1 meter deep for 15 minutes)

Derating curve (sockets)
The derating curve gives the maximum permissible continuous current (limiting continuous current) of a socket, loaded on all contact circuits over the entire temperature range.
In case of reduced duty factor a higher load current is permissible. Please contact our technical support for specific data. According to the standards the derating curve is derived from the measured curve by applying a reduction factor of 0.80.

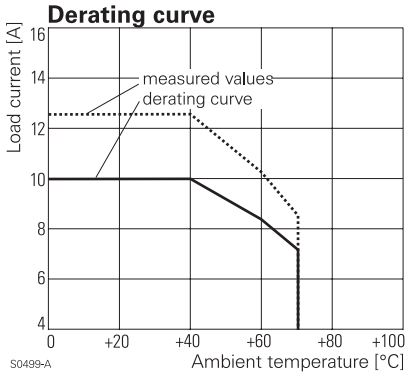

Dielectric strength
Voltage (rms value in AC voltage, 50 Hz 1 min) the insulation can withstand between relay elements that are insulated from one another.

Dimensions
Dimensions are in mm.
PCB pin dimensions are indicated without solder (pre-tinning).

Dimensions, drawings
Unless otherwise stated (see symbol below) technical drawings for product dimensions are using ISO Method E projection (European projection) according to ISO/R 128.

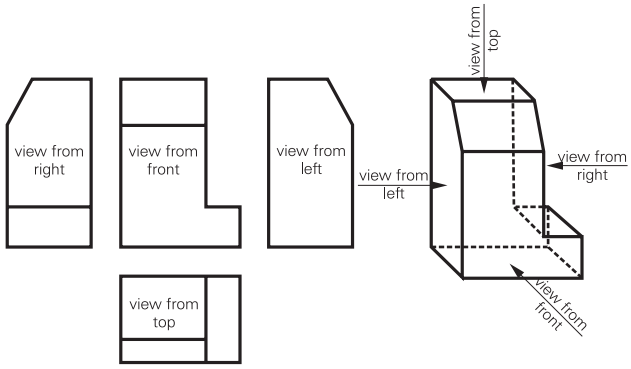

Symbol for Method E projection

Symbol for Method A projection

Dust-proof relay
Relay with a case to protect against penetration of dust.

Duty factor, DF
Ratio of the duration of energization to the total period in which intermittant or continuous or temporary duty takes place. Duty factor is expressed as percentage of the total period.

Dimensions are in mm unless otherwise specified and are shown for reference purposes only.

Product data, technical parameters, test conditions and processing information according to IEC 61810-1 and as specified in this 'Definitions' section or at schrackrelays.com in the 'Schrack' section.

Definitions and specifications subject to change.

Electrical endurance
Number of cycles a relay can perform with electrical contact load defined under specified conditions according IEC 61810-1 and IEC 61810-2.
Unless otherwise specified the electrical endurance refers to:
- NO contact
- AC mains, 50 Hz
- duty factor 50%
- rated frequency of operation
- schematic for contact loading A
- resistive load
- the rated voltage (coil)
- ambient temperature 23°C
- category of protection RTII - flux proof
- single mounting
- relay in upright position (terminals of a print relay pointing downwards).

The electrical endurance is specified according to the criteria for 'useful life', severity level B according IEC 61810-2.
Any use beyond the specified electrical endurance is not in scope of the specified data, the avoidance of such situation requires consideration by the user.
Experience shows that the electrical endurance for inductive loads remains constant down to a power factor of appr. 0.8; contact our technical support on electrical endurance for loads with power factors below 0.8.

Electrical endurance graph
The electrical endurance graph indicates the typical electrical endurance and does not guarantee a minimal value.
Please note:
- the graph for electrical endurance is only valid for the indicated contact material (in case no contact material is specified, it is valid for the contact materials as listed in the respective data sheet), it is not permissible to deduce electrical endurance information for other contact materials.
- it is not permissible to deduce electrical endurance information by extrapolation beyond the range indicated by the curve.

Für Informationen kontaktieren sie bitte unsere Anwendungsberatung.
Also see > Electrical endurance

Flammability according to UL
Data of the flammability class according to the UL 94 (Underwriters Laboratories, Inc., USA) specification.
UL 94 flammability testing, conducted on plastic materials to measure flammability characteristics, determines the material's tendency either to extinguish or to spread the flame once the specimen has been ignited.
The relay relevant UL 94 flame classifications are V-0, V-1, V-2, HB.

Flux proof/suitable for processing on soldering lines
See ´Category of protection (IEC 61810) - RT II.

Forcibly guided contacts
Contact configuration according to EN 50205 with at least one NO contact, one NC contact and a mechanically linked system, designed that the NO and NC contacts within the complete contact set are never closed at the same time, even in case of malfunction. These relays are implemented in the control of safety technology for the protection against damage to persons or objects.

Frequency of operation
The max frequency of operation of intermediate loads may be higher than indicated for full load provided the switching characteristics of the load (e.g. arcing) do not cause an increase of the contact temperature.
The indicated max. frequency of operation without load may also be applied for loads without any switching arc. (pure resistive loads do not cause significant arcs up to 12 V or up to 50 mA at 12...250 V.)

Full disconnection
Contact separation for the disconnection of conductors so as to provide the equivalent of basic insulation between those parts intended to be disconnected.
Note: there are dielectric strength and dimensional requirements.

Functional insulation
Insulation between conductive parts, necessary for the proper functioning of the relay only.

Industrial relays and accessories
Relays and accessories designed for use in closed and electrically secure switching cabinets. In these applications there are lower standard requirements of the insulating properties of components. These products are to be handled by trained personnel only.

Insertion cycles
The symbol A indicates that the insertion and extraction must be done without any load current on the relay/socket contacts.
Unless otherwise stated the accessories are designed for 10 insertion cycles, insertion and extraction without load; A (10).

Insulation resistance
Electrical resistance (initial product condition) measured by applying a DC voltage of 500 V between two elements of a component that are insulated from one another.
The requirements according to IEC 61810-1 are:
- for functional insulation > 2 MOhm
- for basic insulation > 2 MOhm and
- for reinforced insulation > 7 MOhm.

Insulation to IEC 60664-1
Data for insulation co-ordination on:
- type of insulation
- rated insulation voltage
- pollution degree
- rated impulse withstand voltage
- overvoltage category

Latching relay
See > Bistable relay

Limiting continuous current
Is the highest steady state load current a relay or an accessory can withstand continuously while satisfying specified temperature rise requirements; it is identical with the limiting continuous thermal current I_{th}.
Unless otherwise stated the data for relays is given under following condition: all contacts equally loaded, input voltage 110% of nominal coil voltage, max ambient temperature, vented relay, dense packing (mounting distance 0mm), test conditions according to the heat test arrangement IEC EC 61810-1 Annex B.
For accessories/sockets the limiting continuous current is specified by the derating curve (see > derating curve).

Limiting making capacity
The making capacity expressed as a current with a power factor of 1.0 a contact is able to make under specified conditions; for 20 ms data expressed as peak value, for 4 s data expressed as rms value.
Unless othwerwise stated the data refers to the NO contact, rated voltage and a current for a duration of max. 20 ms for at least 100 cycles or 4 s with duty factor of 10%.

Definitions (Continued)

Limiting voltage (coil)
The highest permissible input voltage at the reference temperature at which the relay, with continuous energization, heats up to its max. permissible coil temperature.

Magnetically latching relay
See > Bistable relay

Make contact
See > NO contact

Make current
See > Limiting making capacity

Material group of insulation parts
Categorization of insulation materials according to their tracking indices, according to IEC 60664-1.

Max. DC load breaking capacity
Switching of loads at switching voltage and switching current below the max. DC load breaking capacity curve can be switched off reliably, the arc is extinguished (max. arc duration 10 ms at resistive load). The breaking capacity curve is affected in both position and shape by the contact material and relay design (contact distance, break speed of the contacts, etc.). No statement on the electrical endurance can be derived from these curves.

Max. insertion force total
The force during the insertion of the relay into the socket has to be applied in insertion direction (no tilting) and equally on all connections. The maximum applied force must not exceed the indicated max. insertion force.

Max. operate/reset duration
Maximum duration a bistable coil is energized with rated DC voltage.

Maximum breaking capacity AC
The max switching capacity the contact is intended to break under specified load conditions. The switching current must not exceed the indicated rated current.

Maximum switching voltage
Maximum voltage that may occur between the switching contacts before closing or after opening the contact. Data given for AC refer to a mid-point earthed 3-phase supply system with 230 / 400 VAC.

Maximum voltage (coil)
See > Limiting voltage

Mechanical endurance
Number of cycles without contact load during which the relay remains within the specified characteristics.

Mechanical life
See > Mechanical endurance

Micro disconnection
Adequate contact separation in at least one contact so as to provide functional security.
Note: there is a requirement for the dielectric strength of the contact gap, but no dimensional requirements.

Minimum contact load
General purpose relays are designed for category 3 loads according IEC61810-7; basically these relays are designed for switching loads with the effect of switching arcs. Specific insulation requirements however may call for the use of general purpose relays in applications with low signal loads or for dry switching (switching without the generation of an electrical arc). Note that increased contact resistance may occur if the load conditions are not in scope of the test conditions for category 3 according IEC61810-7. Also see the minimum contact loads recommended for the different contact materials.
Also see > Minimum switching power.

Minimum energization duration
Minimum duration the coil is energized with rated DC voltage. Unless otherwise stated the proposed minimum energization duration is 100 ms.

Minimum operate/reset duration
Minimum duration a bistable coil is energized with rated DC voltage.

Minimum switching power
Product of the switching current and switching voltage for reliable switching. Low contact resistance is reached reliably only above a particular load. Considerably increased contact resistances can occur with smaller loads.

Monostable relays, switching characteristics
A relay is called monostable when its contacts return automatically to the rest position after the input voltage is disconnected.

Monostable, neutral relay, non-polarized relay
A neutral, monostable relay operates independently of the direction of the energizing current (coil supply).

Monostable, polarized relay
A polarized, monostable relay only operates in a specific direction of energization.

Mounting
Describes specific mounting options of the relay

Mounting distance
The distance between two adjacent relays or other electrical components. If not otherwise stated the product data refers to relays in 'single mounting'.
Distance between relays according to IEC 61810-1.
In addition to this definition we use:

- dense packing: relays mounted at minimum distance; this minimum distance is defined by the requirements of the insulation coordination at rated voltage 230 VAC, and/or by mechanical requirements for the mounting of the relay (e.g. use of sockets)
- single packing: relays mounted at a distance without any thermal impact of adjacent relays or components.

NC contact
A contact that is open when the relay is in its operate condition, and which is closed when the relay is in its release condition.

NO contact
A contact that is closed when the relay is in its operate condition, and which is open when the relay is in its release condition.

Nominal power (coil)
See > Coil power

Definitions (Continued)

Nominal voltage (coil)
See > Rated coil voltage

Non-operate voltage
Value of the input voltage at which a relay does not operate

Non-release voltage, hold voltage
The value of the input voltage at which a monostable relay does not release after energization with rated coil voltage and minimum energization duration at standard conditions (no vibration or shock applied to the relay).

Open contact circuit data
Insulation parameters of the contact circuit.

Operate
Process in which a relay shifts from the release/rest condition to the operate condition.

Operate category
See > Operative range

Operate condition
For a monostable relay, specified condition of the relay when it is energized by the specified energizing quantity and has responded to that quantity; for a bistable relay, the condition other than the release condition as declared by the manufacturer

Operate time
The time interval (typical value) that elapses from energizing a relay in the rest state with the rated voltage (pulse or square signal) to the moment when the last output circuit is closed or opened (bounce time not included).

Operate voltage
Value of coil voltage at which a mono- or bistable relay operates

Operate voltage U_1
Value of the coil voltage at which a relay operates, having previously been energized at the same voltage and with rated contact load (thermal equilibrium has to be achieved).

Operate voltage without preenergizing U_0
Minimum permissible input voltage at which the relay operates, for a coil temperature equal to the reference temperature (23°C coil temperature without preenergizing).

Operative range
According to IEC 61810-1.
Class 1: 80%..110% of the rated coil voltage (or range)
Class 2: 85%..110% of the rated coil voltage (or range)
For diagram specification see > coil operative range

Operative voltage range
Permissible range for the energizing voltage as function of the ambient temperature. The operative range is defined by the limiting coil voltage U_2 and the operate voltage U_1 (coil with preenergization)

Overvoltage category
Classification of electrical equipment according to the overvoltage to be expected

Packaging unit
Minimum delivery quantity (e.g. per carton/plastic bar) and quantity per box.

PCB relays
Relays, designed for the use on printed circuit boards.

Pollution degree
Number characterizing the expected pollution of the micro environment.

Pre-make contact
Contact with two operating contact points of different material, with one contact switching prior to the other one. Pre-make contacts are used mainly for high inrush currents.

Product date code
Printed on the product. Indicates the date of production of the product, unless otherwise stated given in the format 'year+week' (e.g. 0412 indicates production in 2004 week 12).

Product key
The ordering code structure does allow a large number of possible variations, but not all possible variations are defined as standard types (ordering codes) and thus not included in the product range.
Special versions to customer specifications can be supplied. Please contact your local sales organization.

Product marking/specials

	This symbol indicates a general possible cause of risk - refer to the specification/data sheet for details.
	Symbol for a NO contact
	Symbol for a NC contact
	Symbol for a CO contact
	Symbol for a forcibly guided contact set (safety relays)
	Symbol for coil information

For information on production date code, see > Product date code

PTI
See >Tracking index

Push-to-test button, test tab
For manual operation of the relay. The test button is to be used for test purposes of an equipment or installation. The push-to-test button is not designed for standard ON/OFF operations and is not to be used as a switch. As no insulation requirements apply the test button is to be operated by trained personnel only.

Rated coil voltage range
Voltage range at which the relay displays the operating characteristics.
These specified operating characteristics are given for a constant DC supply or sinusoidal AC supply. Other operating conditions (e.g. pulse control, ramp voltage, half wave rectifying, etc.) may lead to characteristics other than specified.

Rated coil voltage, Nominal voltage (coil),
Rated voltage at which the relay displays the operating characteristics.

Peak inrush current
See > Limiting making capacity

Definitions (Continued)

These specified operating characteristics are given for a constant DC supply or sinusoidal AC supply. Other operating conditions (e.g. pulse control, ramp voltage, half wave rectifying, etc.) may lead to characteristics other than specified.

Rated current (contacts)
Current a relay can switch on and off and a relay or accessory can carry under specified conditions.
Unless otherwise defined the rated current covers:
- contact current, switching current
- limiting continuous current

For a relay the specified conditions are defined under contact ratings; see > contact ratings.
For accessories the rated current is specified for a duty factor of 50% at rated frequency of operation and at ambient temperature 23°C.

Rated frequency of operation (switching rate)
Number of cycles per unit of time.

Rated insulation voltage
The voltage an insulation can withstand for longterm. Base for the dimensioning of the creepage distance.

Rated voltage (contacts)
Rated voltage (switching voltage) is voltage between the switching contacts before closing or after opening of the contact.

Rated voltage system (insulation)
Rated values of the power supply system. Unless otherwise stated the insulation refers to a three-phase system, mid-point earthed. The rated impulse voltage is the base for the dimensioning of the clearances.

Recommended minimum switching power
see > Minimum switching power

Reference values
Reference values for all tests according to IEC 61810-1.

Reinforced insulation
A single insulation system applied to live parts which provides a degree of protection against electric shock, comparable to a system comprising basic insulation and supplementary insulation.

Relay cycles
Due to the self induction of the coil and the inertia of the parts to be moved, on activating a relay the operations do not take place suddenly. The function diagram below shows the different cycles for the most important relay configurations of undelayed power relays. The cycles specified apply to energizing with rated voltage (without any components in series or parallel to the coil) and at the reference temperature.
See
- operate time
- release time/reset time
- bounce time
- minimum energization duration

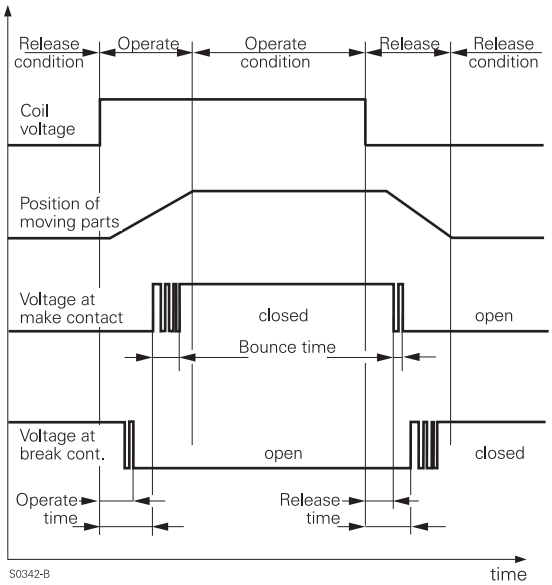

Relay Technology Categories
The 'Relay Technology Categories' describe the degree of sealing of the relay case or its contact unit. See 'Category of environmental protection'.

Relays with forcibly guided contacts
The compliance with regulations for the safety of persons and material is imperative in our technical world. National and international regulations take various risks into account. These safety standards also make demands on components which share with their function the safety level of a plant, machine or the equipment. For safety relays the demand for forcibly guided contact system according ZH1/457, issued by the professional association applies; the contacts have to be linked mechanically in a way, that NO and NC contacts may not be closed at the same time. It has to be ensured that over the entire life and even in case of malfunction (e.g. contact welding) the open contact gap will be at least 0.5 mm. If specified they also comply with the wider requirements according to EN 50205 "relays with forcibly guided contacts"

Release
Process in which a monostable relay shifts from the operate state back to the rest state.

Release time
The time interval (typical value) that elapses from the point of time at which a monostable relay in the operating state has the rated voltage disconnected to the point of time at which the last output circuit has closed or opened (not including the bounce time). The indicated times are valid for energization with rated voltage, without any components in series or parallel to the coil, and at reference temperature.

Release voltage
The input voltage at which a monostable relay must have released to the rest state at the reference temperature.

Reliability
Electromechanical components as relays, are subject to wear (mechanical and electrical). For the reliability the typical bath-tub curve apply, hence singular statistical failure events below typical reliability values may occur.

Definitions (Continued)

Reset
Process in which a bistable relay returns from the operate state back to the rest state.

Reset time
The time interval (typical value) that elapses from the point of time at which a bistable relay in the operating state has the rated voltage (applied in the opposite direction for 1-coil systems and to the reset coil for 2-coil systems) to the point of time at which the last output circuit has closed or opened (not including the bounce time).

Reset voltage max.
The input voltage that must not be exceeded to a bistable coil for reset to the rest state at the reference temperature. Please note the wiring diagram and the polarity (see > Bistable relay).

Reset voltage min.
The input voltage that has to be applied to a bistable coil for reset to the rest state at the reference temperature. Please note the wiring diagram and the polarity (see > Bistable relay).

Resistance to soldering heat
According to IEC 60068-2-20, method 1A.

Rest state
Switch position of a monostable relay in the unenergized state. In bistable relays this is the switch position specified by the manufacturer. The contact position is not defined at delivery.

RoHS - Directive 2002/95/EC
Directive on the Restriction of Hazardous Substances (Directive 2002/95/EU, RoHS directive) restricting the use of certain materials as Lead (Pb), Cadmium (Cd), Mercury (Hg), hexavalent Chromium (Cr6), polybrominated Biphenyls (PBB) and polybrominated Diphenylethers (PBDE).

'Compliant'
indicates that the entire product group is compliant with the RoHS directive. The products do not exceed the maximum concentrations of 0.1% by weight in homogenous materials for lead, hex chrome, mercury, PBB, PBDE and 0.01% for cadmium, or qualify for an exemption to the above limits as defined in the Annex of the RoHS Directive.

Safety relays
See > Relays with forcibly guided contacts

Schematic for contact loading
See > Contact loading

Set voltage
Value of coil voltage at which a bistable relay operates.

Shock resistance (destruction)
This test is used to evaluate the resistance of the relay to heavy mechanical shocks leading to a permanent damage to the relay. This test is performed according to the IEC 60068-2-27, Ea test.

Shock resistance (function)
This test is used to evaluate the resistance of the relay to mechanical shocks such as those that could occur in transport or during operation (no opening of closed relay contacts or closing of open relay contacts with a duration >10 µs is allowed to occur during the test). This test is performed according to the IEC 60068-2-27, Ea test.

Single contact
Contact system with one contact point per contact member (contact blade).

Soldering temperauture/time, IEC 68-2-20
See > Resistance to soldering heat

Standards
The relays in this catalog have been designed, specified and tested in accordance to the relay standard IEC 61810-1 'Electromechanical Elementary Relays - part 1: General and Safety Requirements'.
Typical application for these relays are general industrial equipment, electrical facilities, electrical machines, appliances for household and similar use, information technology and business equipment, building automation equipment, automation equipment, electrical installation equipment, medical equipment, control equipment, telecommunications, vehicles, transportations, etc.
The relays are assessed in line with these applications in accordance with the relevant IEC standards (e.g IEC 60730-1, IEC 60335-1, IEC 60950-1).

Switching current
Electric current which a relay contact makes and/or breaks.

Switching power
Product of the switching current and switching voltage (in W for direct current, in VA for alternating current).

Switching rate
See > Frequency of operation

Switching voltage
Voltage between the switching contacts before closing or after opening of the contact.

Technical data
Technical data in this catalog are based on the IEC 61810-1 and are guidelines for appropriate use under standard conditions. For additional information please contact our technical support.

Terminal screw torque
The maximum indicated terminal screw torque must not be exceeded.

Test tab
See > Push-to-test button

Tracking
Progressive degradation of a solid insulating material by local discharges to form conducting or partially conducting paths.

Tracking index
PTI - Proof tracking index - numerical value of the proof voltage expressed in volts which a material in test can withstand without tracking under specified conditions (according IEV 212-01-45)
CTI - Comparative tracking index - numerical value of the maximum voltage expressed in volts which a metrial in test can withstand without tracking under specified conditions (according IEV 212-01-45)

Twin contact
Contact with two simultaneously operating contact points per contact member (contact blade). Twin contacts increase the contact reliability considerably, especially when switching low currents and voltages (dry circuits).

Type of contact
See > Contact set

Definitions (Continued)

Type of insulation
Quality of insulation system, depending on design and application conditions; applied as:
- functional insulation
- basicinsulation
- reinforced insulation.

Type of interruption
Describes the quality of the contact separation. See:
- micro disconnection
- full disconnection

Vibration resistance (function)
This test is used to evaluate the resistance of the relay to harmonic mechanical oscillations such as those that could occur in transport or during operation. No opening of closed relay contacts or closing of open relay contacts with a duration >10 µs is allowed to occur during the test). This test is performed according to the IEC 60068-2-6, Fc test.

Wash tight/immersion cleanable
See ´Category of protection (IEC 61810)´ - RT III
Relays that can be cleaned together with the printed circuit board after soldering. The washing requires a suitable solvent. The term “immersion cleanable/wash tight” is not identical with “hermetically sealed”!
Unless otherwise stated the relays are wash tight according to Qc2 IEC 60068-2-17, tested with a water immersion test at 70°C for 1 minute.
Contact our technical support for suitable solvents and washing parameters.

Processing Information

Mounting
Unless otherwise stated the relay can be mounted in any position. The relays can be further processed in the industry standard commercial soldering and cleaning (for suitable products) plants.

Insertion
No pressure should be exerted on the terminal pins after the relay has been inserted in the printed circuit board. After insertion in the printed circuit board, the terminal pins should not be bent in order to fix them. Bending the terminal pins in relays sealed against washing can damage the sealing and could alter the relay parameters. However, if fixing must be carried out before soldering, use a pressure plate or similar.

Fluxing
The fluxing process should be set up so that the flux wets only the underside of the printed circuit board. The flux should only be visible as foam flux through any open perforations in the printed circuit board. If the printed circuit board is flooded by foam flux, bursting flux bubbles can lead to contamination in open relays and, consequently, to failures. To protect against corrosion, no acidiferous flux should be used.The recommended flux types are 1.1.3, 1.2.3 or 2.2.3 according to DIN EN 29454 T.1.

Preheating
In the normal preheating of flux, the temperature of the upper surface of the printed circuit board should not exceed 120°C. Note that any not completely dried flux might evaporate in an explosive reaction and sputter; ensure that no flux penetrates the insides of open relays.

Soldering
PIN version
Unless otherwise stated all pcb relays sold after January 1st 2005 are pretinned with Sn99,3Cu0,7. The pre-soldered pins are suited for standard soldering processes with Pb-solder as well as for Pb-free solder processes. The solder bath temperature should not exceed 270°C for appr. 10 s for flux-proof relay versions (RT II) and should be max. 260°C for appr 5 s for wash-tight relays (RT III).
For other bath temperatures and solder time (e.g. higher solder bath temperature with reduced dipping time) contact our technical support.
Manual soldering
For manual soldering, we recommend a soldering temperature of 300 to 350°C for a maximum soldering time of 2 s.

Cooling
The thermal loading resulting from the soldering process can be reduced at the end of the process by cooling. Do not change the temperature suddenly, especially avoid cold shock for the hot relay.

Cleaning
We recommend avoiding washing processes in order to protect the environment. The fluxes we specify render a wash process unnecessary. If cleaning is required for other reasons, the following points must be observed independently of the washing process:

- do not stress the terminals mechanically before or during the mounting, soldering or cleaning process
- the printed circuit must be washed immediately after the soldering process
- do not lower the temperature while the relay is in contact with any liquid, e.g. some residue of cleaning medium can be between relay and PCB
- do not use jet presure higher than 1,5 bar or ultrasonic pressure higher than 0,5 bar. Do not use any ultrasonic pressure for relays with gold plated contacts
- the individual wash stations must be separate from one another to prevent cross-contamination!
- after the final washing process, the printed circuit boards must be cleaned again using a clean washing medium!

Protective lacquering
For the protective lacquering of the mounted printed circuit boards, we recommend single-component lacquer that is applied by immersion. Protective lacquering is recommended for wash-tight relays only.
Do not use any coating or potting compound without special testing and avoid cooling down the relay when in contact with liquid conformable coating. Silicon containing laquer or potting compound must not be used!
The maximum drying temperature should be 70°C.

Definitions Rev. EK1
Issued 2005/11
www.tycoelectronics.com
www.schrackrelays.com

Dimensions are in mm unless otherwise specified and are shown for reference purposes only.

Product data, technical parameters, test conditions and processing information according to IEC 61810-1 and as specified in this 'Definitions' section or at schrackrelays.com in the 'Schrack' section.

Definitions and specifications subject to change.

Application information

Humidity / Condensation
Standard conditions:
Annual mean realtive air humidity ≤ 75% at ambient temperature 21°C, on 30 complete days distributed naturally over the year 95% at ambient temperature ≤ 25°C, on the remaining days occasionally 85% at 23°C. No condensing or freezing allowed (storage and/or use).
For use and storage at other conditions, condensation or freezing due to temperature changes has to be avoided. Use and storage within the limits indicated in the graph.

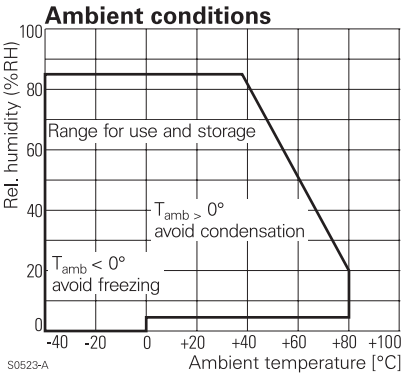

Switching of different polarities in a multi-pole relay
Switching of different potentials on adjacent contact circuits of a multi-pole relay is permitted as long as the sum of applied voltages does not exceed the rated insulation voltage.
The switching of different voltages with the generation of an electrical arc and the switching of reverse polarity on adjacent contact circuits of a multi-pole relay without contact separated chambers however is not permitted. The contact load has to be connected to the same contact side.

Application sample 1:
- rated insulation voltage of the contacts 250VAC
- contact circuit 1: load voltage 230 VAC, 1 A inductive load, dry switching (switching without contact load)
- contact circuit 2: signal load 12 VDC, 100 mA resistive load

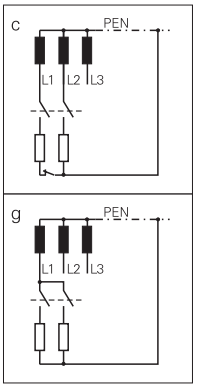

Application sample 2:
- rated insulation voltage of the contacts 250 VAC
- contact circuit 1: load voltage 230 VAC, 1 A inductive load
- contact circuit 2: load voltage 230 VAC, 3 A resistive load
  Both contacts generate an electrical arc during the switching process. Both contact circuits are supplied by a common phase L1. This phase 1 is connected to the CO contact. The loads are connected to the neutral conductor (PEN).

Combination of relay and socket, insulation requirements
The new relay standard IEC 61810-1 has an important impact on the combination of a relay and the respective socket. The relay sockets have to comply with the requirements of IEC 61984 and the insulation reqirements of the IEC 60664-1.
Even if the socket alone fullfills or exceeds the insulation reqirements as clearance/creepage for the relay, the combination of a relay with a socket may reduce the creepage and lead to a lower rated insulation voltage. Hence restrictions for the combination relay-socket may be the consequence, e.g. a reduction of the voltage range or of the pollution degree.
Especially for miniature multi-pole relay and respective sockets with small distance between the contact circuits these restrictions have a big impact.
Apart from the insulation properties, the thermal characteristics of the combination relay and socket are of utmost importance (see > derating curves).
As sockets from different sources are not directly comparable, the compliance with the technical specification can only be guaranteed for an approved combination relay-socket. As design details and characteristics for non Tyco/Schrack products are beyond our control, guarantees for technical parameters and characteristics regarding such combinations is not possible.
Risks as reduced dielectric strength, fire hazard, etc. due to use based on unclear or omitted data, limitations or restrictions must not be underestimated. As an improper use of not approved combinations relay-socket cannot be ruled out, we only guarantee the characteristics and parameters for the approved combinations of relays and sockets as indicated in the catalog and data sheets.

Reduction of coil power consumption
For monostable DC relays a reduction of coil power is possible if vibration or shock requirements are low. After an energizing pulse of 100 ms with rated coil voltage the coil, power consumption can be reduced to 50% by using constant DC supply (71% of rated coil voltage). After an energizing pulse of at least 100 ms additional savings in coil power consumption of monostable DC relays can be achieved if the coil current is controlled, e.g. by pulse width modulation (PWM). For the minimum recommended coil current please contact our technical support. The used frequency should be chosen so that it is outside of the audible range. The characteristics of the application regarding electromagnetic compatibility (EMC) has to be checked when PWM control is applied.

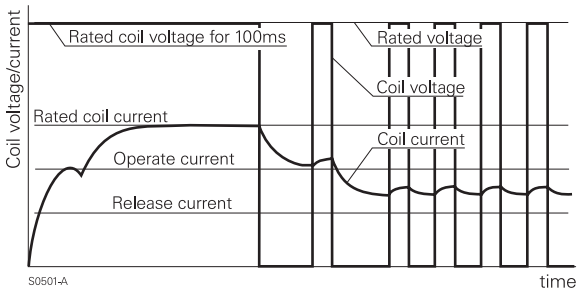

Safety Relays / Definitions

Relays with forcibly guided contacts

General information
Relays with forcibly guided contacts play a decisive role in avoiding accidents on machines and in systems. Safety control circuits ensure switching into a fail-safe condition. Forcibly guided contacts monitor the function of the safety control circuits.
For this safety function, all the assumed faults that can occur must already have been taken into consideration and their effects examined. Standard EN 50205 "Relays with forcibly guided contacts" contains current internationally-defined design requirements. Relays with forcibly guided contacts that comply with EN 50205 are also referred as "safety" relays.

Function
Power relays with forcibly guided (linked) contacts:
Power relays with at least one break and one make contact where all contacts are mechanically linked to guarantee that make and break contacts can never be simultaneously in the closed position.
Contact gaps shall never be less than 0.5 mm over the operating life, not only under normal operating conditions, but also when a fault occurs.
This requirement allows the respective exclusive-or contact to detect the fault of a contact to open. For example, the welding of a make contact is indicated by the non-closing of the break contact when the energization is switched off.

To fulfill the specifications of the standard, the assumed faults must be considered:

Assumed fault	Effect
Failure of the contact to open due to welding	The failure of any make contact to open has the effect that none of the break contacts close even when the relay is not energized. The failure of any break contact to open has the effect that none of the make contacts close when the relay is energized.
Failure of the contact to open due to failure of the drive	The drive has no effect on the forcibly guided contact operation.
Breakage of the contact spring	Simultaneous closing of the break and make contacts is not possible even as a result of breakage. Completely insulated contact chambers (SR2, SR4, SR6) or barriers (SR2M) guarantee a contact gap of 0.5 mm.

Dimensions are in mm unless otherwise specified and are shown for reference purposes only.
Product data, technical parameters, test conditions and processing information according to IEC 61810-1 and as specified in this 'Definitions' section or at schrackrelays.com in the 'Schrack' section.
Definitions and specifications subject to change.

Safety Relays / Definitions (Continued)

Application example
The configuration of safety control circuits is basically only possible with specified fault conditions. Safety relays have the characteristic that make and break contacts can never both be closed at the same time.

The following circuit diagram shows an emergency stop control circuit consisting of three 4-pole safety relays.

The first fault to occur
- does not cause the safety function to fail because more components are used than required for the circuit to function (redundancy).
- prevents an restart and can be detected as a result (self monitoring)

Operation
- Closing the "ON" switch causes the K1 relay to be pulled in
- The K2 and K3 relays are energized via the make con-tacts K1-1 and K1-2 and hold themselves via K2-2 or K3-2
- The break contacts K2-1 and K3-1 cause the drop-out of K1 where the load circuit is released via the break con-tacts of K1-3 or K1-4.

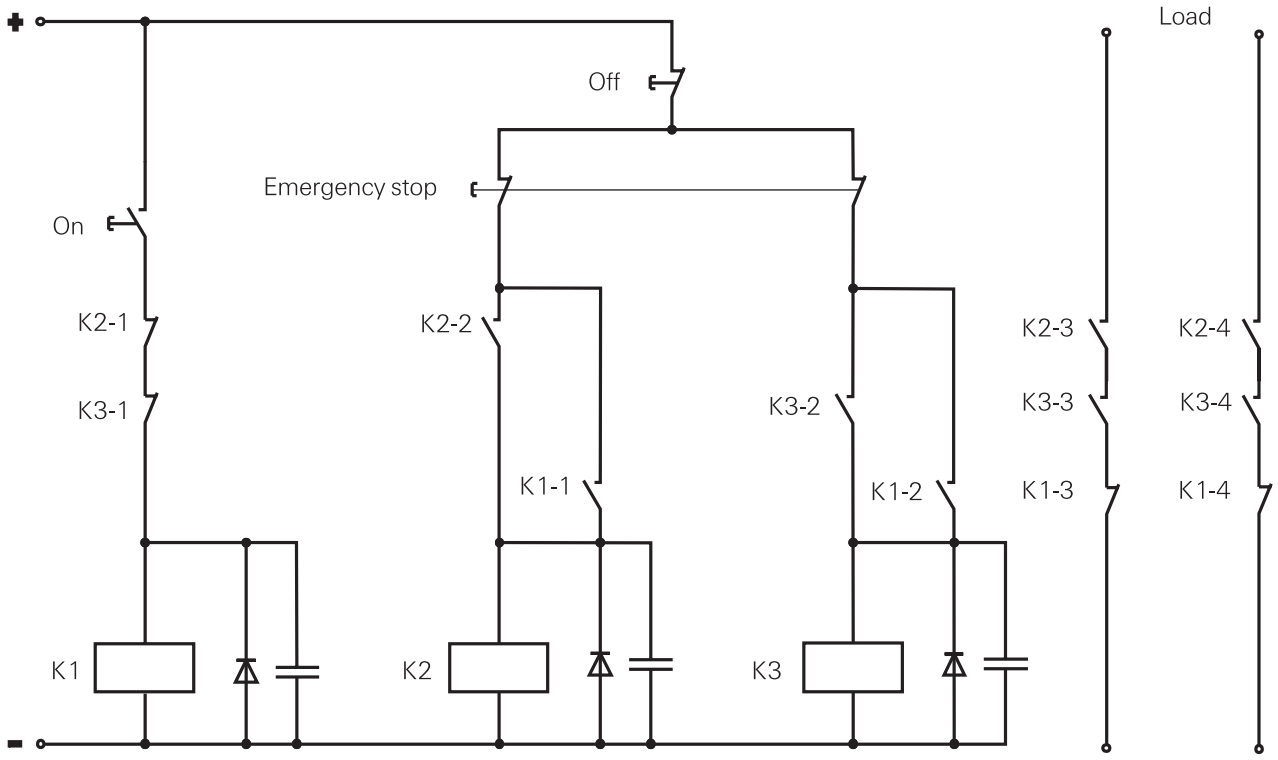

Fault analysis (examples):

Type of fault	Is there any danger arising from the fault?	Is a restart possible?
Failure of contact K2-3 to open	No, K3-3 opens when the emergency stop switch is actuated	No, K2-1 and K2-3 cannot be closed at the same time (fault excluded by forcibly guid). "ON" button does not cause K1 to close
Failure of contact K1-3 to open	No, K2-3 and K3-3 open when the emergency stop switch is actuated	No, K1-1 and K1-2 cannot close due to closed K1-3. K2 and K3 are not energized

Dimensions are in mm unless otherwise specified and are shown for reference purposes only.
Product data, technical parameters, test conditions and processing information according to IEC 61810-1 and as specified in this 'Definitions' section or at schrackrelays.com in the 'Schrack' section.
Definitions and specifications subject to change.