Data sheet
RS Essentials
Condenser Microphone

Features:

- Omni-directional
- 4mm diameter
- Solder pads
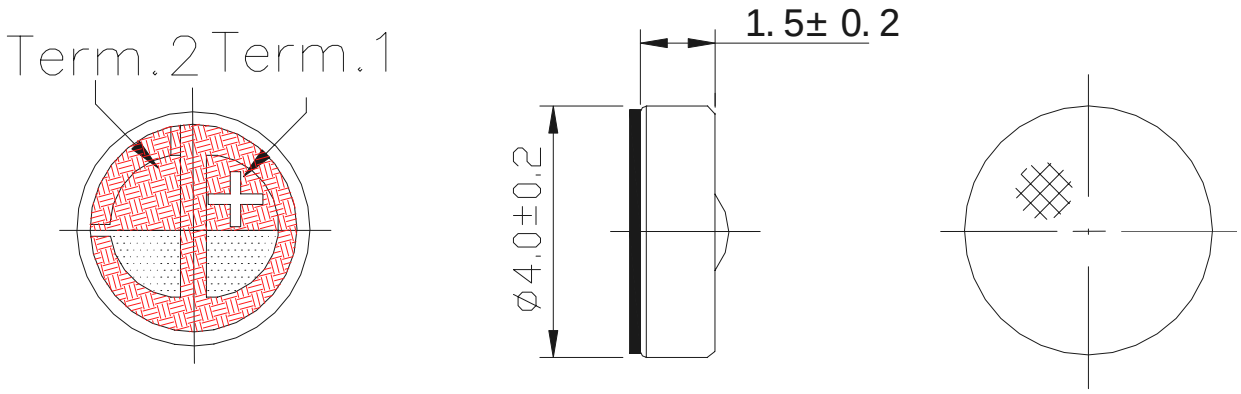
SPECIFICATIONS	Electret Condenser Microphone
Directivity	Omni directional
Standard Operating Voltage	2V
Maximum Operating Voltage	10V
Maximum Current Consumption	0.5mA
Output Impedance (F=1KHz 1Pa)	‹ 2.2K Ohms
Frequency	50~16000Hz
Sensitivity (@F=1KHz, 0dB=1V/Pa)	-42±3dB
Signal to Noise Ratio (F=1KHz 1Pa) A weighted	›60dB
Positive Terminal	Term 1