THIS DRAWING IS UNPUBLISHED. RELEASED FOR PUBLICATION -,- .
© COPYRIGHT 2005 By - ALL RIGHTS RESERVED.

LOC	DIST
AD	25

REVISIONS

P	LTR	DESCRIPTION	DATE	DWN	APVD
	S1	REVISED PER ECO-11-004835	11MAR11	RK	HMR

1. DIMENSIONS IN BRACKETS ARE IN INCHES.
2. HOUSING MATERIAL: GLASS-FILLED POLYESTER. COLOR: GRAY.
3. CONTACT MATERIAL: PHOSPHOR BRONZE.
4. CONTACT FINISH: 0.00076[.000030] GOLD IN CONTACT AREA. 0.00127[.000050] NICKEL UNDERPLATE ALL OVER. TIN-LEAD ON POSTS.
5. RECOMMENDED HOLE SIZE FOR MANUAL APPLICATION OF CONNECTOR ONTO PC BOARD.
6. PART NUMBER, DATE CODE IDENTIFICATION, CSA LOGO HOT-STAMPED THIS APPROXIMATE AREA.
7. CONTACT POINT.
8. HOT-STAMPING ON THIS SIDE.
9. CONTACT FINISH: DIN 41612 CLASS 3 IN CONTACT AREA. TIN-LEAD ON POSTS.
10. CONTACT FINISH: 0.00127[.000050] GOLD IN CONTACT AREA. 0.00127[.000050] NICKEL UNDERPLATE ALL OVER. TIN-LEAD ON POSTS.
11. CONTACT FINISH: DIN 41612 CLASS 2 IN CONTACT AREA. TIN-LEAD ON POSTS.

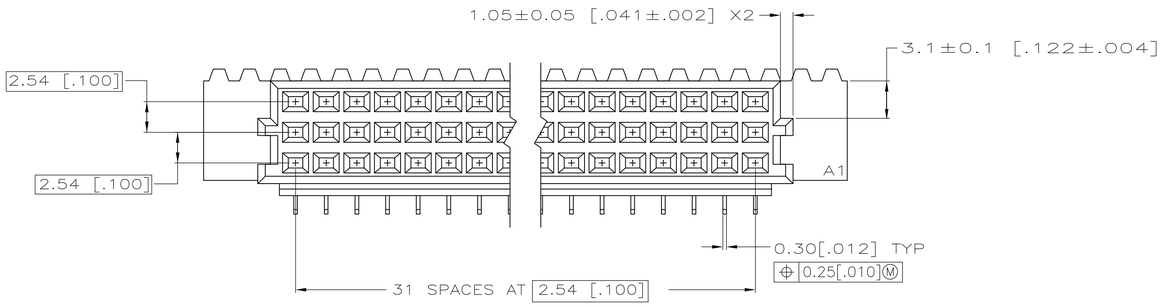

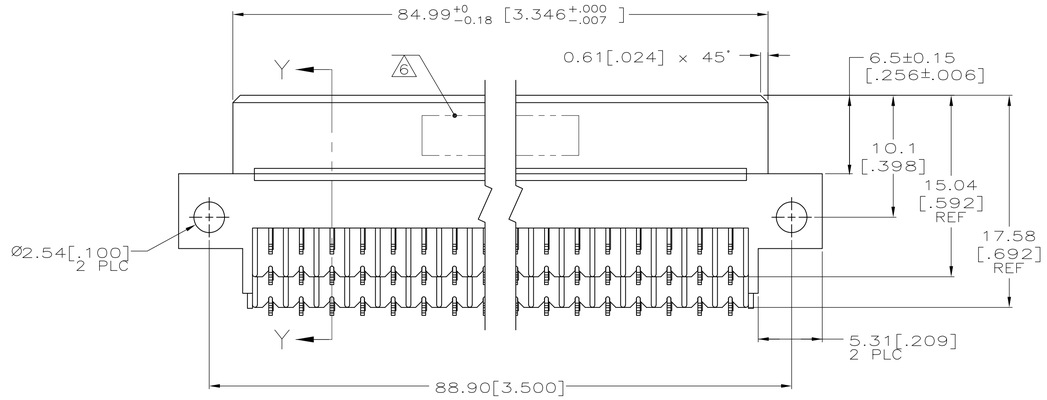

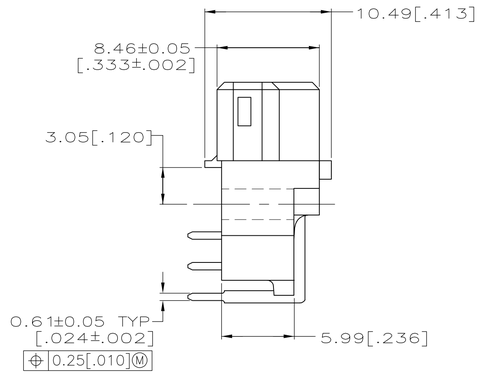

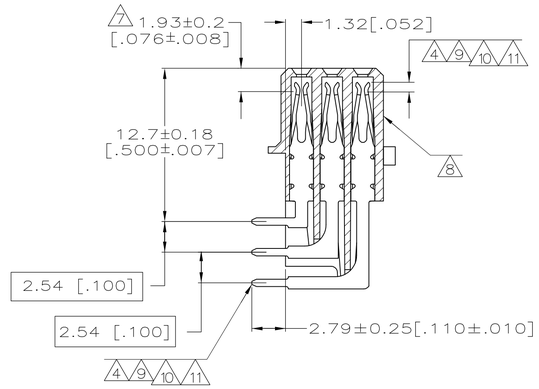

SECTION Y-Y

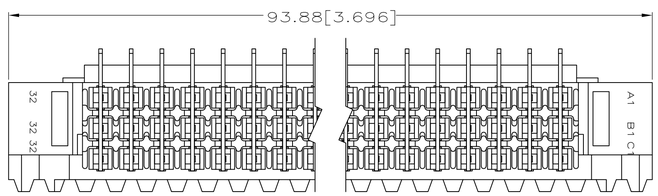

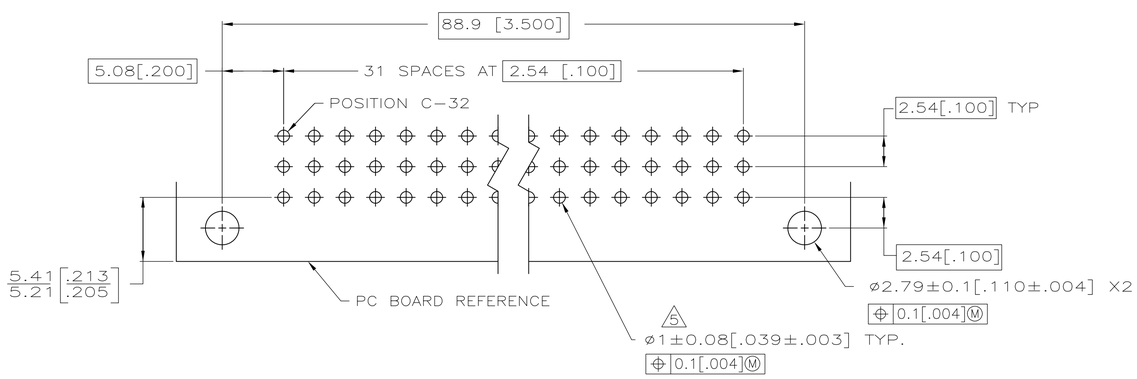

PC BOARD LAYOUT

	NOTES	POSITIONS LOADED	ROWS LOADED C	ROWS LOADED B	ROWS LOADED A	NO. OF LOADED POSITION	ASSY PART NUMBER
OBSOLETE	9	1 THRU 32	X	X	X	96	650461-9
OBSOLETE	11	1 THRU 32	X	X	X	96	650461-6
	11 4	1 THRU 32	X	X	X	96	650461-5
		1 THRU 32	X	X	X	96	650461-4
OBSOLETE	10	1 THRU 32	X	X	X	96	650461-1

THIS DRAWING IS A CONTROLLED DOCUMENT.

DIMENSIONS: mm[INCHES]

TOLERANCES UNLESS OTHERWISE SPECIFIED:
0 PLC ± -
1 PLC ± -
2 PLC ± -
3 PLC ± 0.13[.005]
4 PLC ± -
ANGLES ± -

MATERIAL 2 3
FINISH 4 9 10 11

DWN L. BRINER 13MAR90
CHK N. DRASHER 24OCT90
APVD N.DRASHER 24OCT90
PRODUCT SPEC —
APPLICATION SPEC —
WEIGHT —

TE Connectivity

NAME ASSEMBLY, RECEPTACLE, EUROCARD, TYPE R, 96 POSITION

SIZE	CAGE CODE	DRAWING NO	RESTRICTED TO
A1	00779	C-650461	—

CUSTOMER DRAWING | SCALE 4:1 | SHEET 1 OF 1 | REV S1

4805 (3/11)