Alle Rechte vorbehalten/ *All rights reserved*

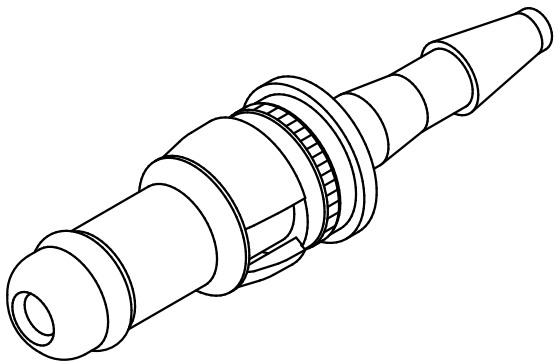

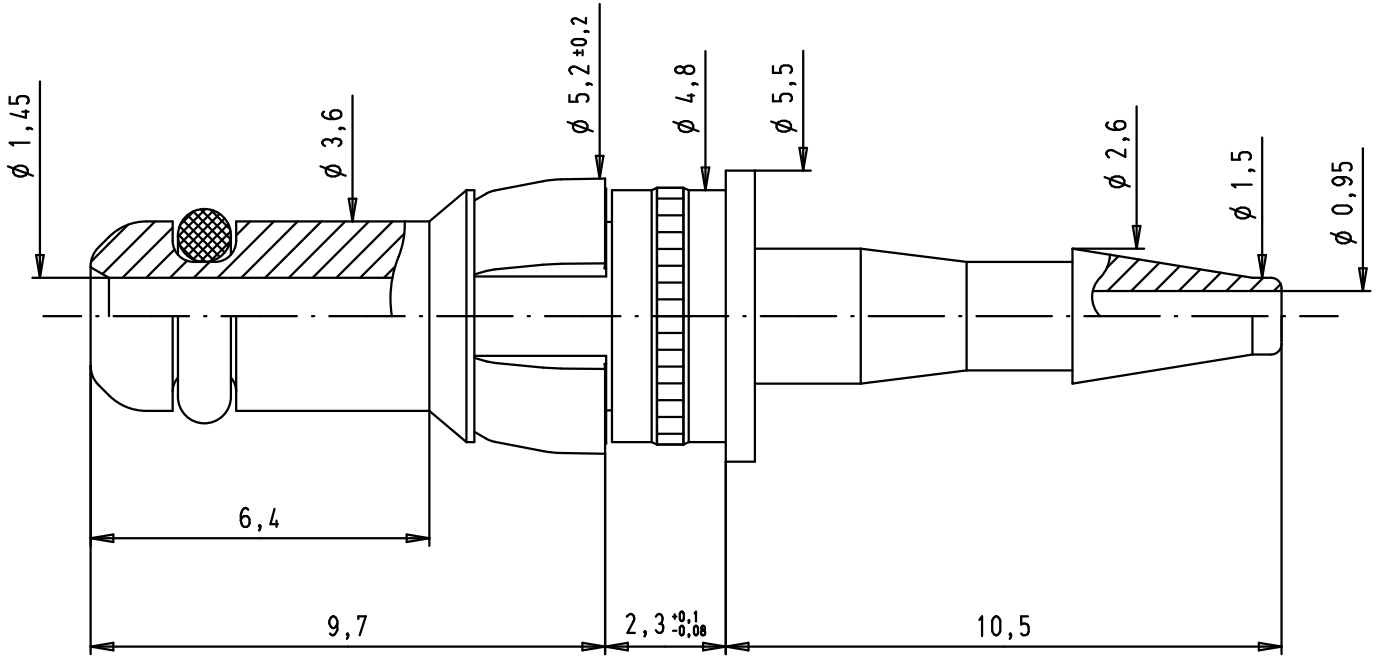

				Dat.	Name	All Dim. in mm Orig. Size DIN A 4	Straight male pneumatic contact for 2 mm inner diameter compressed air tube	Maßstab/ *Scale* 7:1
			Detail.	18/08/04	TR			
			Insp.					
35404	21/11/08	PK	Stand.					
33985	24/04/07	PK	HARTING EURL F-95972 Paris				TB 09 69 287 0060	Blatt/ *Page* 1/1
32147	18/08/04	TR						
Mod.	Dat.	Name					Sub.	