THIS DRAWING IS UNPUBLISHED. RELEASED FOR PUBLICATION -,- .
© COPYRIGHT - BY TYCO ELECTRONICS CORPORATION. ALL RIGHTS RESERVED.

LOC	DIST
FT	0

REVISIONS

P	LTR	DESCRIPTION	DATE	DWN	APVD
	Y1	REVISED PER ECO-06-10451	5/4/06	SS	GS

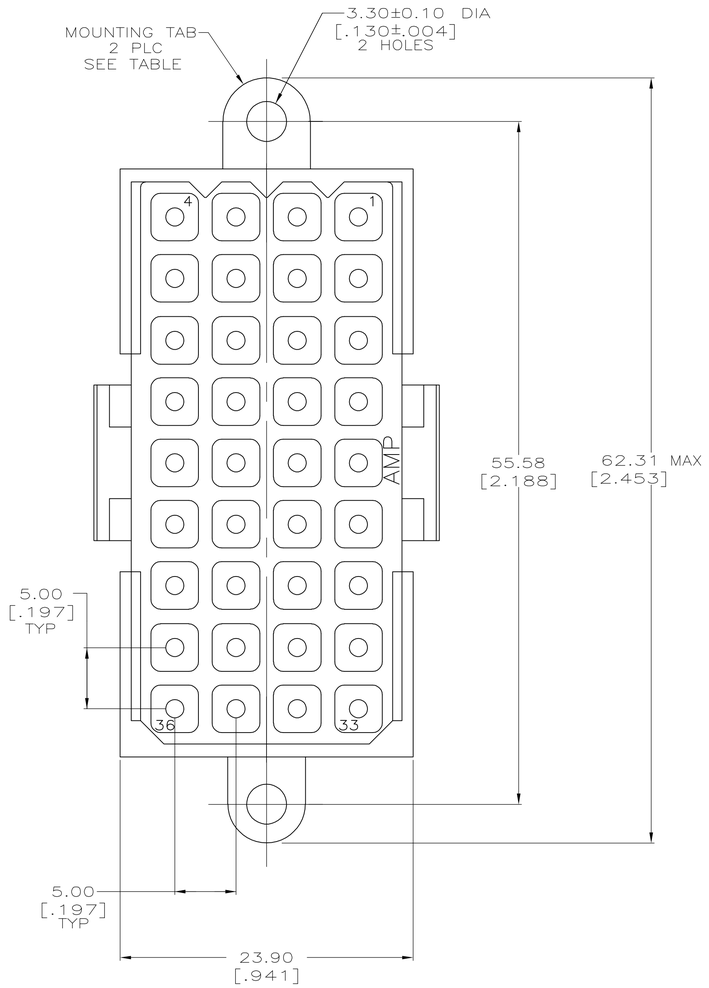

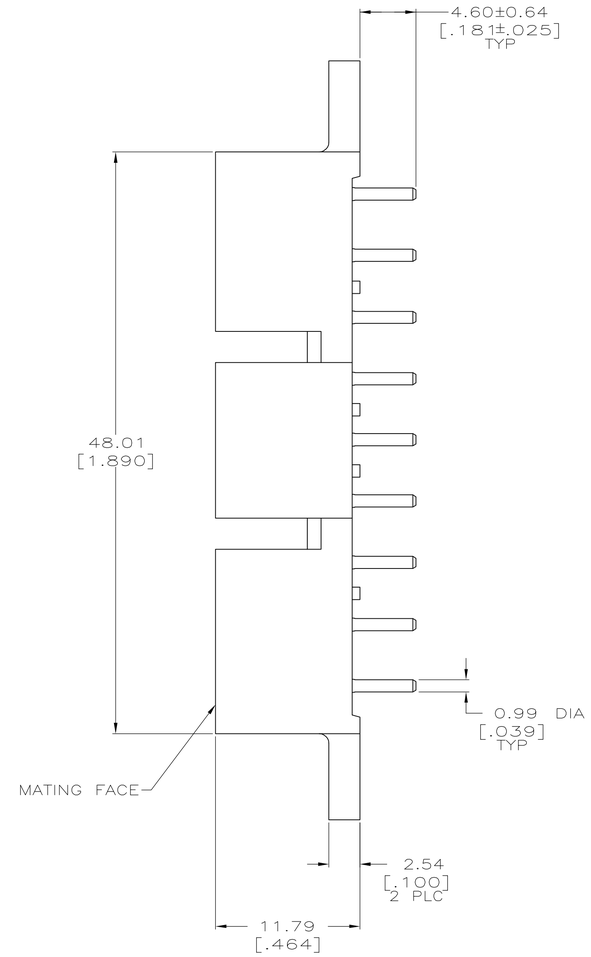

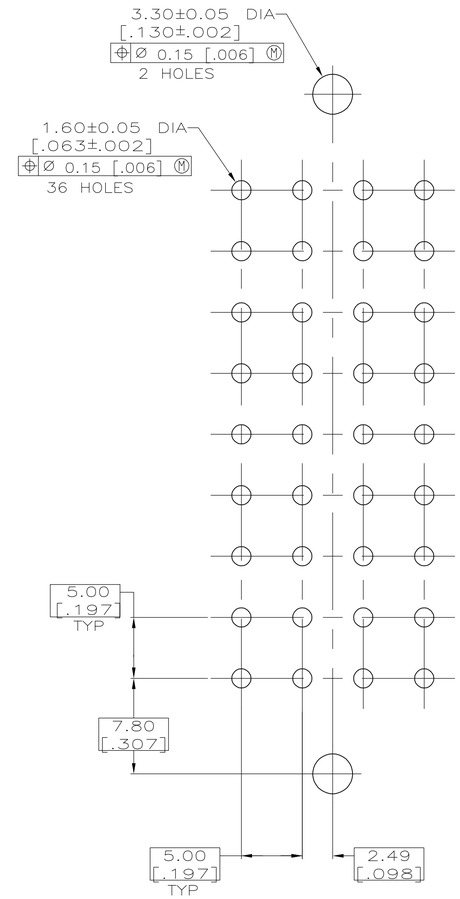

RECOMMENDED PC BOARD LAYOUT

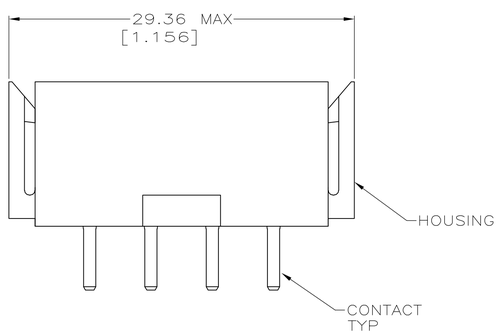

1. NYLON, UL 94V-0 RATED, RED.
2. BRASS PER ASTM B36.
3. 3.81um [.000150] MIN TIN OVER 2.54um [.000100] MIN COPPER.
4. 0.76um [.000030] MIN GOLD FOR A LENGTH OF 5.08 [.200] FROM MATING END, 3.81um [.000150] MIN TIN-LEAD FOR A LENGTH OF 4.83 [.190] MIN FROM OPPOSITE END, BOTH OVER 1.27um [.000050] MIN NICKEL.
5. .000150 MIN TIN OVER .000100 MIN CU, OR .000050 MIN NICKEL.
6. 0.76um [.000030] MIN GOLD FOR A LENGTH OF 5.08 [.200] FROM MATING END, 3.81um [.000150] MIN TIN FOR A LENGTH OF 4.83 [.190] MIN FROM OPPOSITE END, BOTH OVER 1.27um [.000050] MIN NICKEL.

	CONTACT FINISH	MOUNTING TABS	PART NO.
	6	NO	1-207121-0
	6	YES	207121-9
	5	YES	207121-8
	4	NO	207121-4
	4	YES	207121-3
OBSOLETE	3	NO	207121-2
	3	YES	207121-1

THIS DRAWING IS A CONTROLLED DOCUMENT.

DIMENSIONS: INCHES

TOLERANCES UNLESS OTHERWISE SPECIFIED:
0 PLC ± -
1 PLC ± -
2 PLC ± 0.13 [.005]
3 PLC ± -
4 PLC ± -
ANGLES ± -

MATERIAL HOUSING: 1
FINISH CONTACT: SEE TABLE

DWN L.SIPE 03/12/92
CHK R.STONE 3-17-92
APVD A.TRAVIS 3-17-92
PRODUCT SPEC 108-10033
APPLICATION SPEC —
WEIGHT —

tyco Electronics
Tyco Electronics Corporation
Harrisburg, Pa

NAME PIN HEADER ASSEMBLY, 36 POSITION, METRIMATE
-

SIZE	CAGE CODE	DRAWING NO	RESTRICTED TO
A1	00779	C-207121	—

CUSTOMER DRAWING SCALE 4:1 SHEET 1 OF 1 REV Y1