THIS DRAWING IS UNPUBLISHED. RELEASED FOR PUBLICATION -,- .
© COPYRIGHT - By - ALL RIGHTS RESERVED.

METRIC | LOC A1 | DIST —

REVISIONS

P	LTR	DESCRIPTION	DATE	DWN	APVD
	A4	REVISED PER ECO-11-005150	21MAR11	RK	HMR

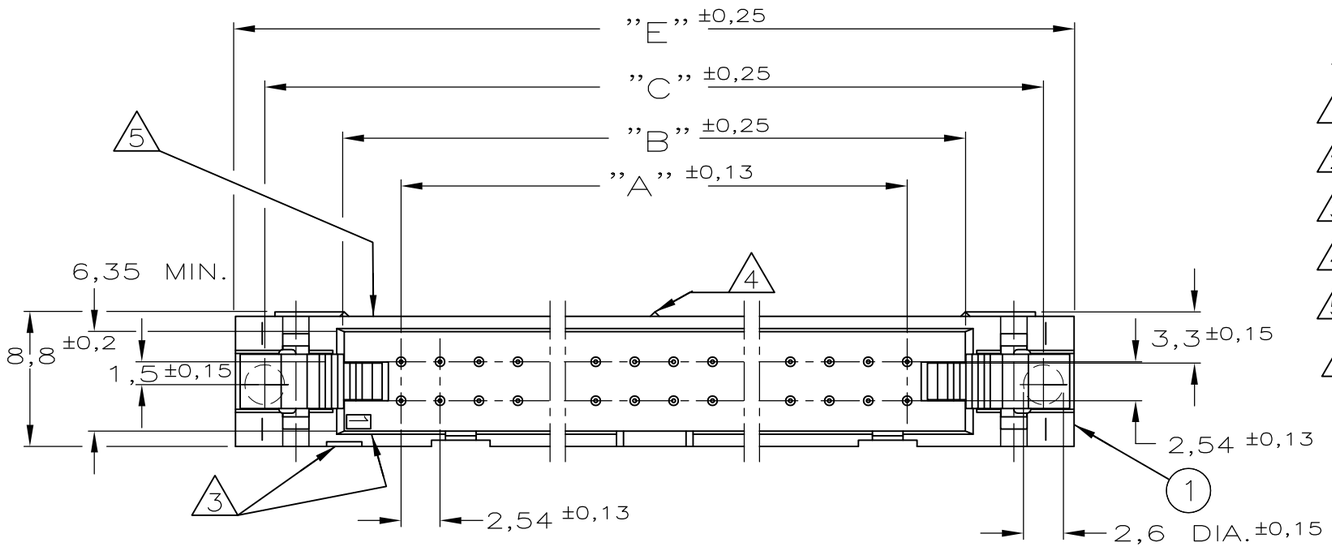

NOTES

1. SNAP-IN POLARIZERS PN. 927636-2 OR 927637-2 CAN BE APPLIED.
2. THERE IS NO WINDOW FOR SNAP-IN POLARIZERS AT THIS END IN 10 AND 14 POS. HEADERS.
3. INDICATION OF FIRST POSITION.
4. THERE IS NO CENTER STAND-OFF IN 10-26 POS. HEADERS.
5. PARTNUMBER AND PROD.-DATE ON SUITABLE SURFACE X-828 588-X DD.MM.YY
6. HOLE OVER THE ENTIRE WIDTH OF CODING HOLDER PERMITTED

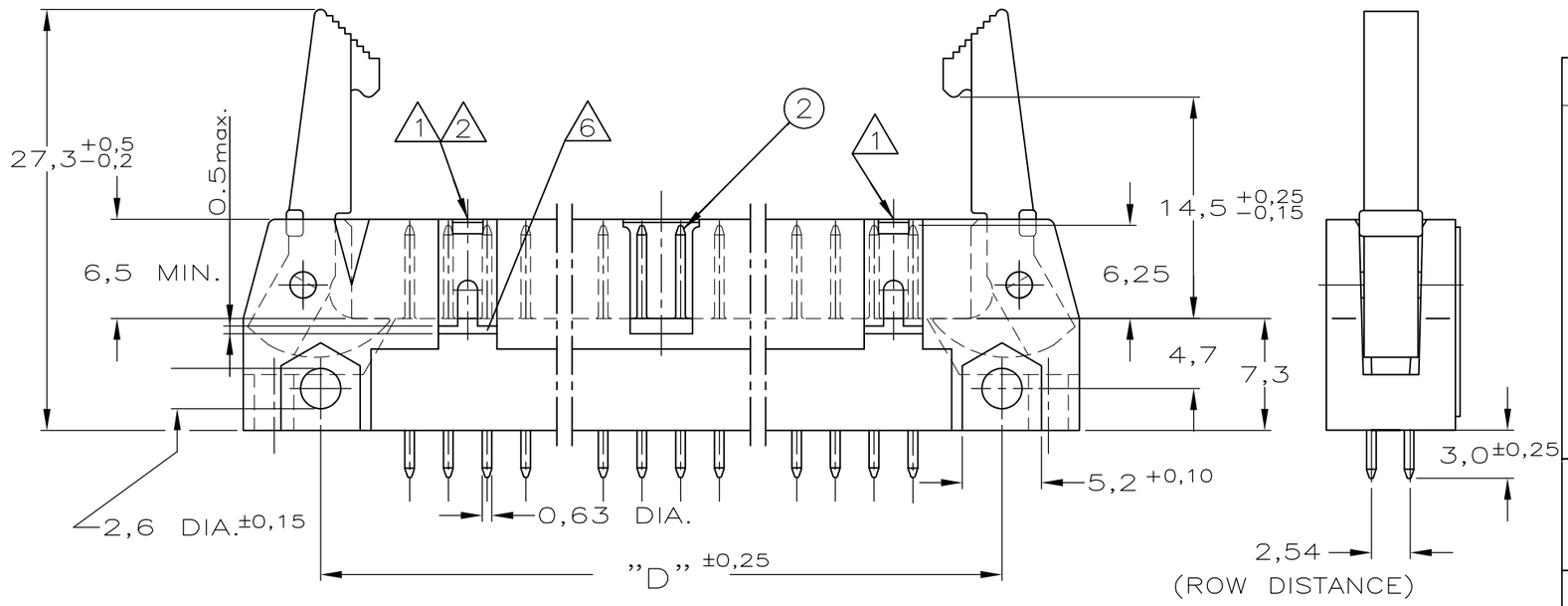

RECOMMENDED PCB-HOLE PATTERN

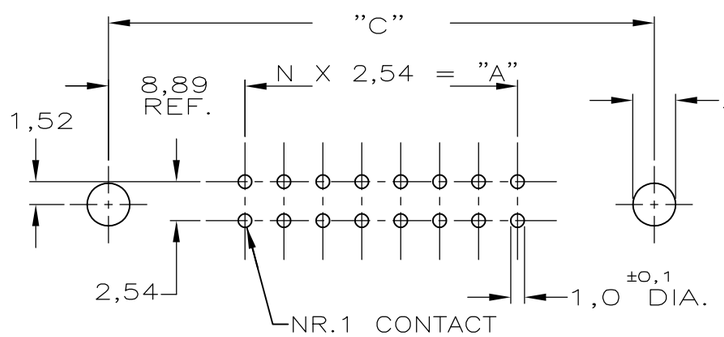

COMPONENT NAME	MATERIAL	PLATING/COLOR
2 PIN-CONTACT	BRASS	MATING SIDE: 0,8µm AU OR 0,8µm AMP DURAGOLD® / OVER 1,27µm NI SOLDER SIDE: MIN. 3,0µm SN OVER 1,27µm NI
1 HOUSING	GLASSFILLED POLYESTER	GREY

VARIABLE CONNECTOR DIMENSIONS					NR. OF POSITIONS	PARTNUMBER
DIM."E"	DIM."D"	DIM."C"	DIM."B"	DIM."A"		
100,6	90,4	96,5	86,4	78,7	64	6-828590-4
95,5	85,3	91,4	81,3	73,7	60	6-828590-0
82,8	72,6	78,7	68,6	61,0	50	5-828590-0
70,1	59,9	66,0	55,9	48,3	40	4-828590-0
62,5	52,3	58,4	48,3	40,6	34	3-828590-4
52,3	42,2	48,3	38,1	30,5	26	2-828590-6
44,7	34,5	40,6	30,5	22,9	20	2-828590-0
39,6	29,5	35,6	25,4	17,8	16	1-828590-6
37,1	26,9	33,0	22,9	15,2	14	1-828590-4
32,0	21,8	27,9	17,8	10,2	10	1-828590-0

THIS DRAWING IS A CONTROLLED DOCUMENT.

DIMENSIONS: mm

TOLERANCES UNLESS OTHERWISE SPECIFIED:
0 PLC ± -
1 PLC ± -
2 PLC ± -
3 PLC ± -
4 PLC ± -
ANGLES ± -

MATERIAL -
FINISH -

DWN J.v.LIEMPT 29-11-93
CHK R.VERSTIJNEN. -
APVD L.V.SOEST. -
PRODUCT SPEC —
APPLICATION SPEC —
WEIGHT —

TE Connectivity

NAME AMP-LATCH HEADER 180 DEG. VERSION WITH LATCHES

SIZE	CAGE CODE	DRAWING NO	RESTRICTED TO
A3	00779	C-828590	—

CUSTOMER DRAWING | SCALE — | SHEET 1 OF 1 | REV A4

1470-19 (3/11)