Type 2 surge protection plug - VAL-MS 230 IT ST - 2807599

Please be informed that the data shown in this PDF Document is generated from our Online Catalog. Please find the complete data in the user's documentation. Our General Terms of Use for Downloads are valid
(http://download.phoenixcontact.com)

Surge protection connector type 2 with high-capacity varistor for VAL-MS base element, thermal monitoring, visual fault warning. Design: 230 V AC (IT system)

Why buy this product

- Single-channel, DIN-rail mountable protective devices
- Base element with/without floating remote indication contact
- Optical, mechanical status indication for the individual arresters
- Disconnect device on each individual plug
- Mechanical coding of all slots
- Consists of base element and plug

Key commercial data

Packing unit	10 pc
GTIN	4 017918 075286
Weight per Piece (excluding packing)	47.55 g
Custom tariff number	85363010
Country of origin	Germany

Technical data

Dimensions

Height	52.4 mm
Width	17.5 mm
Depth	55.3 mm
Horizontal pitch	1 Div.

Ambient conditions

Degree of protection	IP20
Ambient temperature (operation)	-40 °C ... 80 °C

Type 2 surge protection plug - VAL-MS 230 IT ST - 2807599

Technical data

Ambient conditions

Ambient temperature (storage/transport)	-40 °C ... 80 °C
Altitude	≤ 2000 m (amsl (above mean sea level))
Permissible humidity (operation)	5 % ... 95 %
Shock (operation)	25 g
Vibration (operation)	5 g

General

Standards/specifications	IEC 61643-11 2011
	EN 61643-11 2012
IEC test classification	II
	T2
EN type	T2
Number of ports	One
SPD design	Voltage-limiting type
Mode of protection	L-PEN
	L-N
	L-PE
Mounting type	On base element
Color	black
Housing material	PA 6.6
Pollution degree	2
Inflammability class according to UL 94	V-0
Type	DIN rail module, two-section, divisible
Number of positions	1
Arrester can be tested with CHECKMASTER from software version:	From SW rev. 1.10
Surge protection fault message	Optical

Additional descriptions

Note	Usable in all low-voltage systems between L-N or L-PEN. Only usable in IT Systems between L-PE, if the exposed-conductive-parts (bodies) of the equipment of the low-voltage installation is connected to the earthing arrangement of the transformer substation. (interconnected earthing arrangement of the HV-transformer substation with the bodies of the LV-installation. $R_E = R_A$ accordance to IEC 60364-4-442 / VDE 0100-442 Fig. 44D / Example a)

Protective circuit

Nominal voltage U_N	240/415 V AC (TN)
	240/415 V AC (TT)
	230 V AC (IT)
Nominal frequency f_N	50 Hz (60 Hz)
Maximum continuous operating voltage U_C	385 V AC
Residual current I_{PE}	≤ 0.45 mA
Standby power consumption P_C	≤ 175 mVA

Type 2 surge protection plug - VAL-MS 230 IT ST - 2807599

Technical data

Protective circuit

Nominal discharge current I_n (8/20) µs	20 kA
Maximum discharge current I_{max} (8/20) µs	40 kA
Short-circuit current rating I_{SCCR}	25 kA
Voltage protection level U_p	≤ 1.8 kV
Residual voltage U_{res}	≤ 1.8 kV (at I_n)
	≤ 1.6 kV (at 10 kA)
	≤ 1.4 kV (at 5 kA)
	≤ 1.3 kV (at 3 kA)
TOV behavior at U_T	415 V AC (5 s / withstand mode)
	440 V AC (120 min / withstand mode)
Response time t_A	≤ 25 ns
Max. required backup fuse with branch wiring	125 A AC (gG)

Connection data

Connection method	VALVETRAB plug-in system

NEMA/UL protective circuit

UL class	Type 4 SPD for Type 2 applications
Maximum continuous operating voltage MCOV (L-N)	385 V AC
Nominal voltage U_N	230 V AC
Mode of protection	L-N
Power distribution system	1
Nominal frequency	50/60 Hz
Voltage protection rating VPR (L-N)	1.5 kV
Nominal discharge current I_n (L-N)	20 kA

Classifications

eCl@ss

eCl@ss 4.0	27140201
eCl@ss 4.1	27130801
eCl@ss 5.0	27130801
eCl@ss 5.1	27130801
eCl@ss 6.0	27130805
eCl@ss 7.0	27130805

ETIM

ETIM 2.0	EC000941
ETIM 3.0	EC000941
ETIM 4.0	EC000941
ETIM 5.0	EC000941

Type 2 surge protection plug - VAL-MS 230 IT ST - 2807599

Classifications

UNSPSC

UNSPSC 6.01	30212010
UNSPSC 7.0901	39121610
UNSPSC 11	39121610
UNSPSC 12.01	39121610
UNSPSC 13.2	39121620

Approvals

Approvals

Approvals

IECEE CB Scheme / CSA / UL Recognized / KEMA-KEUR / ÖVE / cUL Recognized / GOST / CCA / KEMA-KEUR / cULus Recognized

Ex Approvals

Approvals submitted

Approval details

IECEE CB Scheme

CSA

Nominal voltage UN	230 V

UL Recognized

KEMA-KEUR

Type 2 surge protection plug - VAL-MS 230 IT ST - 2807599

Approvals

ÖVE

cUL Recognized

GOST

CCA

KEMA-KEUR

cULus Recognized

Accessories

Accessories

Bridge

Wiring bridge - MPB 18/4-12 - 2809296

Wiring bridge for modules with connecting pitch 17.5 mm, 4-phase, 12-pos.

Wiring bridge - MPB 18/4- 8 - 2809283

Wiring bridge for modules with connecting pitch 17.5 mm, 4-phase, 8-pos.

Type 2 surge protection plug - VAL-MS 230 IT ST - 2807599

Accessories

Wiring bridge - MPB 18/3- 6 - 2809241

Wiring bridge for modules with connecting pitch 17.5 mm, 3-phase, 6-pos.

Wiring bridge - MPB 18/1-57 - 2809238

Wiring bridge for modules with connecting pitch 17.5 mm, 1-phase, 57-pos.

Wiring bridge - MPB 18/1-12 - 2748593

Wiring bridge for modules with connecting pitch 17.5 mm, 1-phase, 12-pos.

Wiring bridge - MPB 18/1- 9 - 2748580

Wiring bridge for modules with connecting pitch 17.5 mm, 1-phase, 9-pos.

Wiring bridge - MPB 18/1- 8 - 2748577

Wiring bridge for modules with connecting pitch 17.5 mm, 1-phase, 8-pos.

Type 2 surge protection plug - VAL-MS 230 IT ST - 2807599

Accessories

Wiring bridge - MPB 18/1- 6 - 2748564

Wiring bridge for modules with connecting pitch 17.5 mm, 1-phase, 6-pos.

Wiring bridge - MPB 18/1- 4 - 2809225

Wiring bridge for modules with connecting pitch 17.5 mm, 1-phase, 4-pos.

Wiring bridge - MPB 18/1- 3 - 2809212

Wiring bridge for modules with connecting pitch 17.5 mm, 1-phase, 3-pos.

Wiring bridge - MPB 18/1- 2 - 2809209

Wiring bridge for modules with connecting pitch 17.5 mm, 1-phase, 2-pos.

Wiring bridge - MPB F600X16/ 1GS - 2818355

Wiring bridge flexible, diameter: 16 mm², with a fork-type cable lug on one side, length: 600 mm

---

Type 2 surge protection plug - VAL-MS 230 IT ST - 2807599

Accessories

Wiring bridge - MPB F400X16/ 1GS - 2818342

Wiring bridge flexible, diameter 16 mm², with a fork-type cable lug on one side, length: 400 mm

---

Wiring bridge - MPB F200X16/ 1GS - 2818339

Wiring bridge flexible, diameter 16 mm², with a fork-type cable lug on one side, length: 200 mm

---

Wiring bridge - MPB 18/1-10/1.0.0 - 2830443

Wiring bridge for modules with connecting pitch 17.5 mm, 1-phase, 10 pitches with contact sequence 1-0-0

Wiring bridge - MPB 18/1-20/1.2.5 - 2830168

Wiring bridge for modules with connecting pitch 17.5 mm, 1-phase, 20 pitches with contact sequence 1-2-0-0-5

Device marking

Zack marker strip - ZBN 18:UNBEDRUCKT - 2809128

Zack marker strip, Strip, white, Unlabeled, Can be labeled with: Plotter, Mounting type: Snap into tall marker groove, For terminal block width: 18 mm, Lettering field: 18 x 5 mm

---

Type 2 surge protection plug - VAL-MS 230 IT ST - 2807599

Accessories

Zack marker strip - ZBN 18:UNBEDRUCKT - 2809128

Zack marker strip, Strip, white, Unlabeled, Can be labeled with: Plotter, Mounting type: Snap into tall marker groove, For terminal block width: 18 mm, Lettering field: 18 x 5 mm

---

Labeled device marker

Marker for terminal blocks - ZBN 18,LGS:ERDE - 2749589

Marker for terminal blocks, Strip, white, labeled, Horizontal: Grounding symbol, Mounting type: Snap into tall marker groove, For terminal block width: 18 mm, Lettering field: 18 x 5 mm

---

Marker for terminal blocks - ZBN 18,LGS:L1-N,ERDE - 2749576

Marker for terminal blocks, Strip, white, labeled, Horizontal: L1, L2, L3, N, GND, Mounting type: Snap into tall marker groove, For terminal block width: 18 mm, Lettering field: 18 x 5 mm

---

Marker for terminal blocks - ZBN 18,LGS:ERDE - 2749589

Marker for terminal blocks, Strip, white, labeled, Horizontal: Grounding symbol, Mounting type: Snap into tall marker groove, For terminal block width: 18 mm, Lettering field: 18 x 5 mm

---

Marker for terminal blocks - ZBN 18,LGS:L1-N,ERDE - 2749576

Marker for terminal blocks, Strip, white, labeled, Horizontal: L1, L2, L3, N, GND, Mounting type: Snap into tall marker groove, For terminal block width: 18 mm, Lettering field: 18 x 5 mm

---

Marker pen

Type 2 surge protection plug - VAL-MS 230 IT ST - 2807599

Accessories

Marker pen - B-STIFT - 1051993

Marker pen, for manual labeling of unprinted Zack strips, smear-proof and waterproof, line thickness 0.5 mm

Additional products

Type 2 surge protection base element - VAL-MS BE - 2817741

Base element for type 2 arresters of the VALVETRAB MS series of products. Design: 1-channel

Type 2 surge protection base element - VAL-MS BE/FM - 2817738

Base element for type 2 arresters of the VALVETRAB MS series of products, with remote indication contact. Design: 1-channel

Drawings

Dimensioned drawing

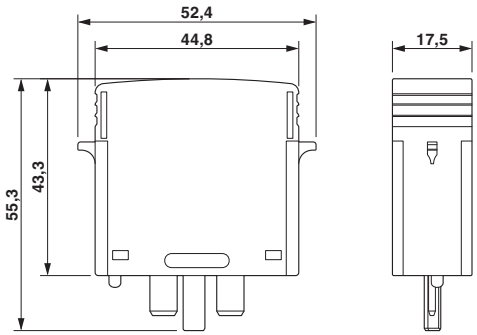

Circuit diagram

Phoenix Contact 2014 © - all rights reserved
http://www.phoenixcontact.com