Alle Rechte vorbehalten/ *All rights reserved*

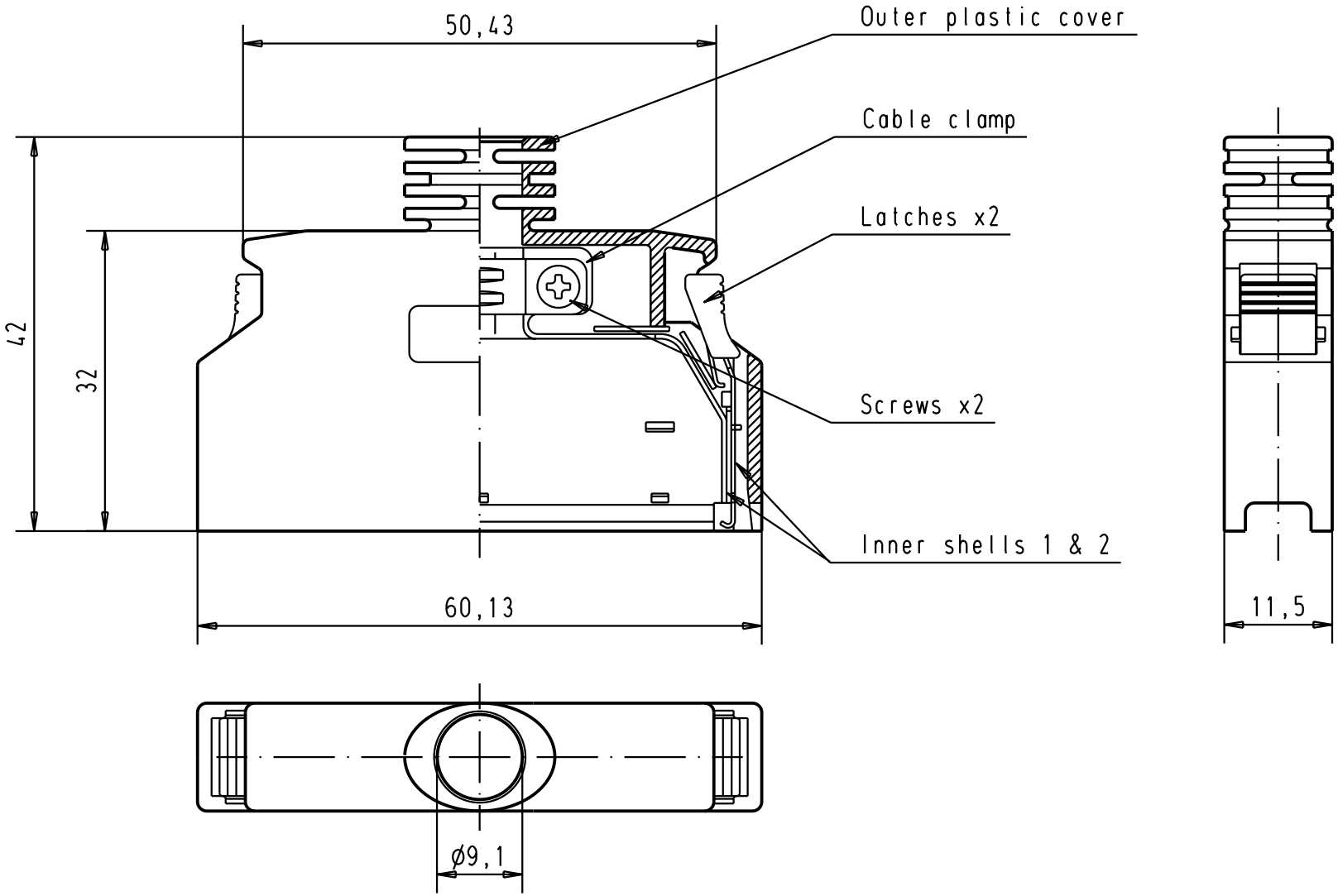

				Dat.	Name			Maßstab/ *Scale*
			Detail.	20-JUN-02	CV	All Dim. in mm Orig. Size DIN A 4	*har.mik®* I/O pin/socket 68 poles platic hood with metal insert for IDC male bellow connector	1,5:1
			Insp.					
			Stand.					
31056	20-JUN-02	CV	HARTING EURL F-95972 Paris				TB 60 13 068 0153	Blatt/ *Page* 1/1
Mod.	Dat.	Name					Sub.	