Alle Rechte vorbehalten/ *All rights reserved*

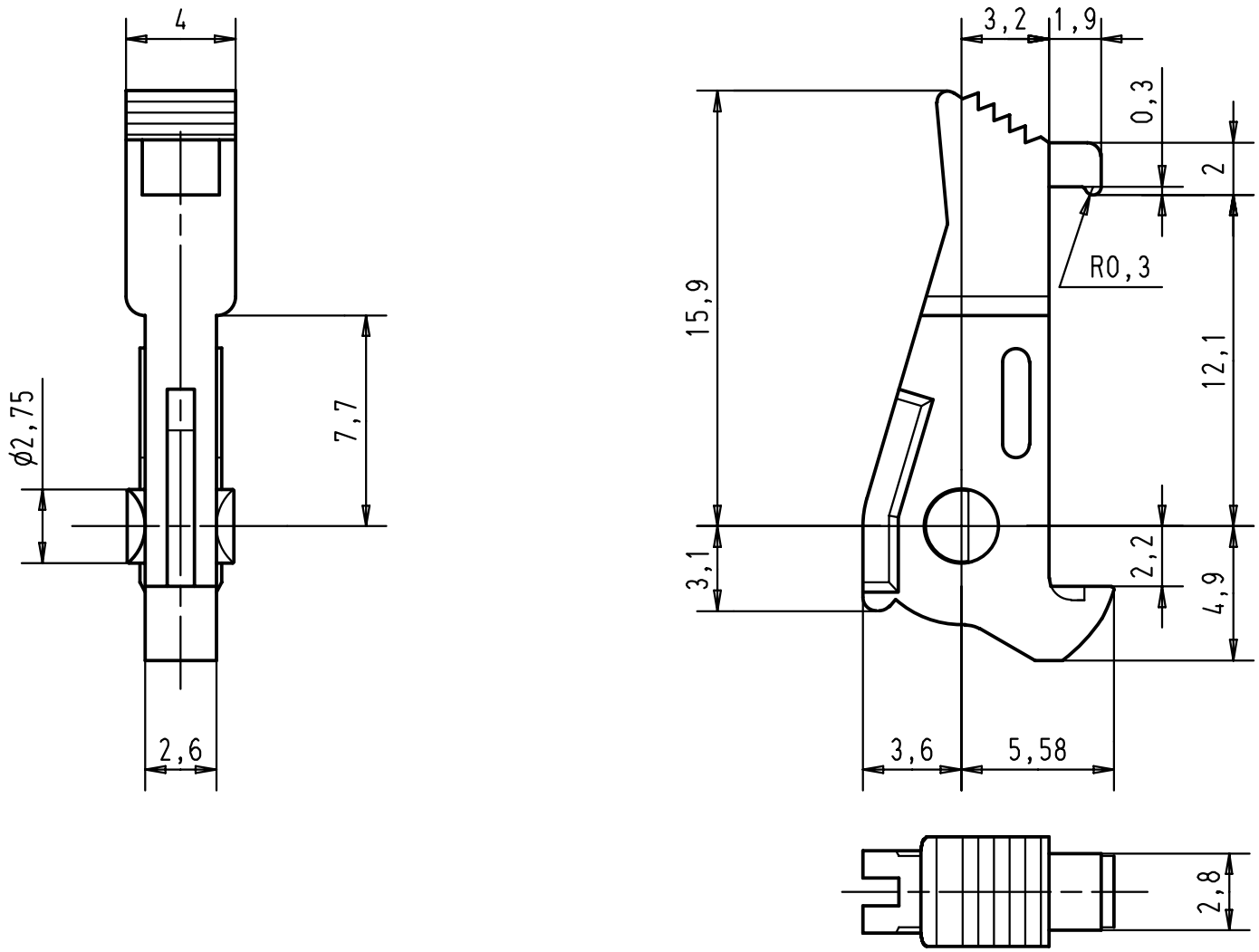

				Dat.	Name			Maßstab/ *Scale*
			Detail.	01-FEB-00	JB	All Dim. in mm Orig. Size DIN A 4	SEK 18 long locking lever	4:1
			Insp.	01-FEB-00	JMV			
			Stand.					
26570	01-FEB-00	JB	HARTING F-95972 Paris				TB 09180009903	Blatt/*Page* 1/1
Mod.	Dat.	Name					Sub.	