DRAWING FOR REFERENCE: This is subject to change without notice
05/31/2014

HRS DRAWING FOR REFERENCE

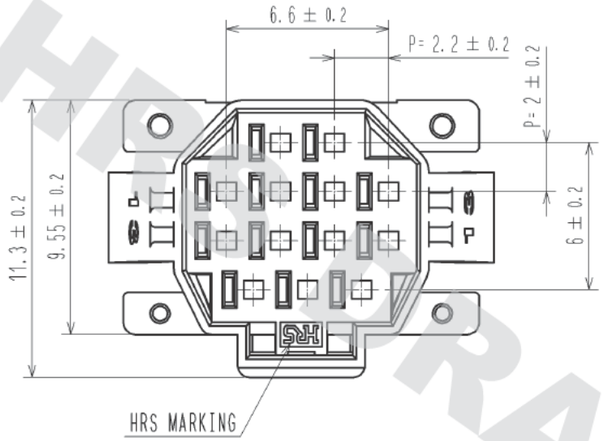

7 MATING FIGURE (PANEL MOUNTED)

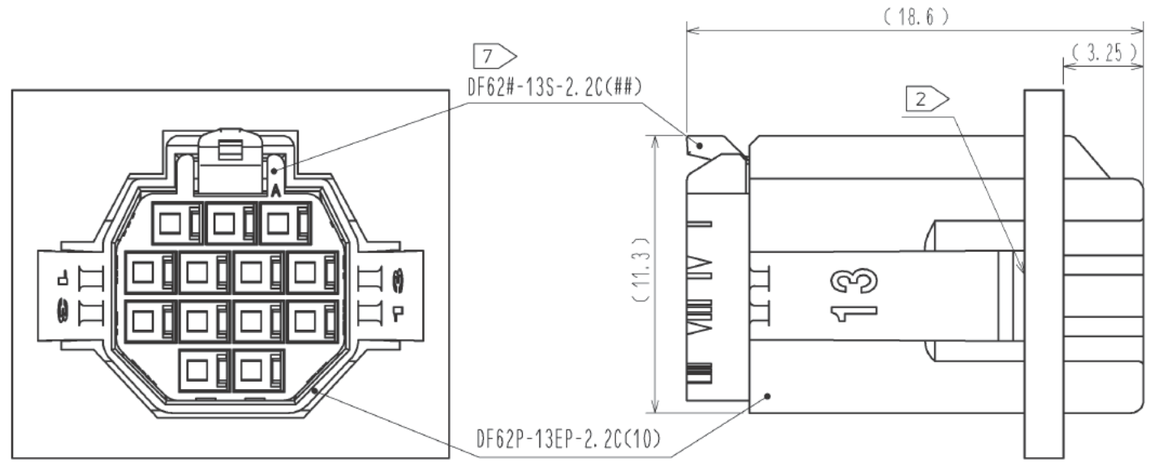

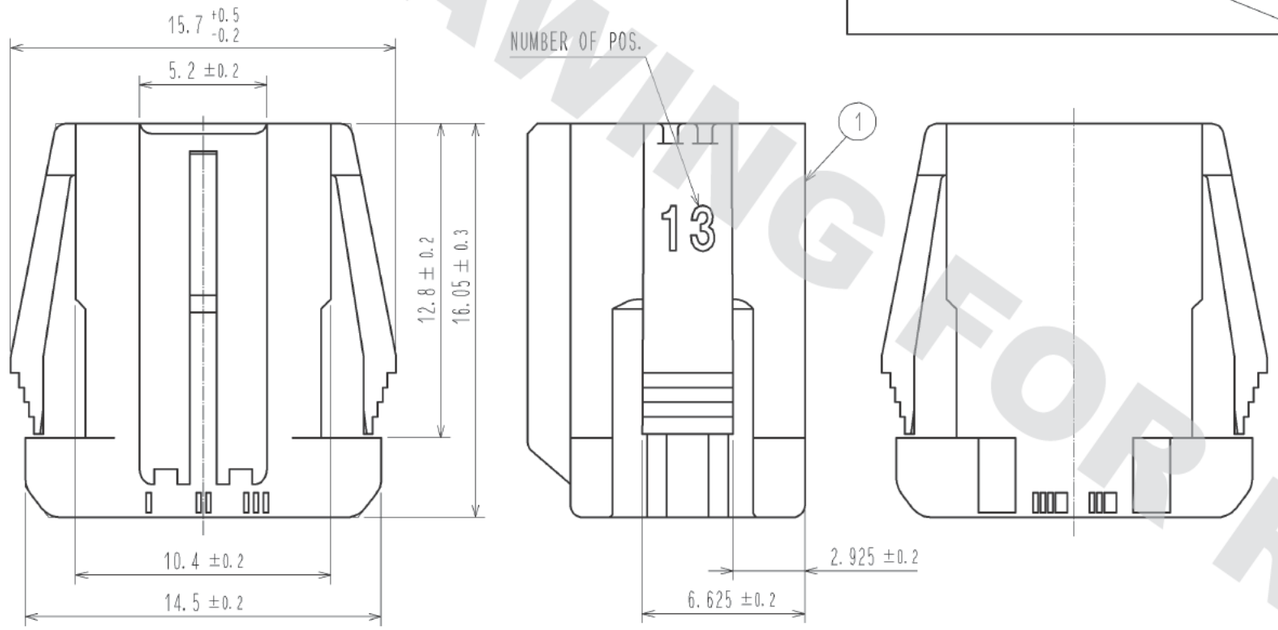

3 4 RECOMMENDED PANEL CUTOUT DIMENSION

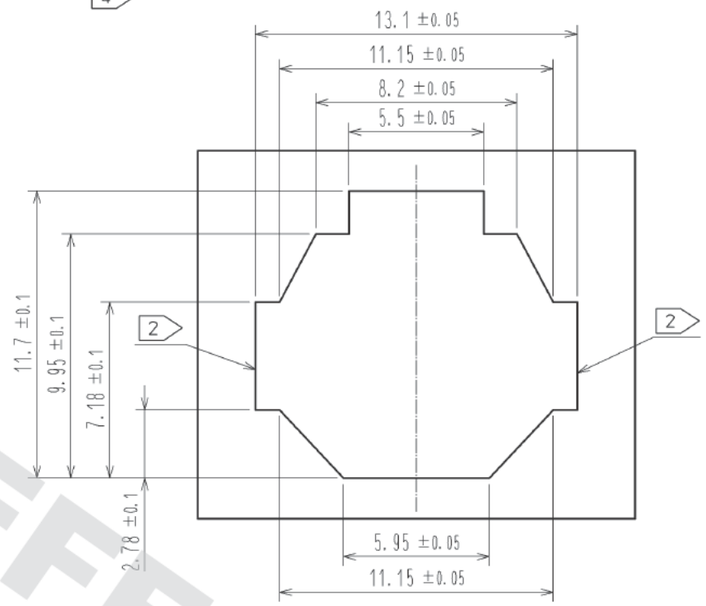

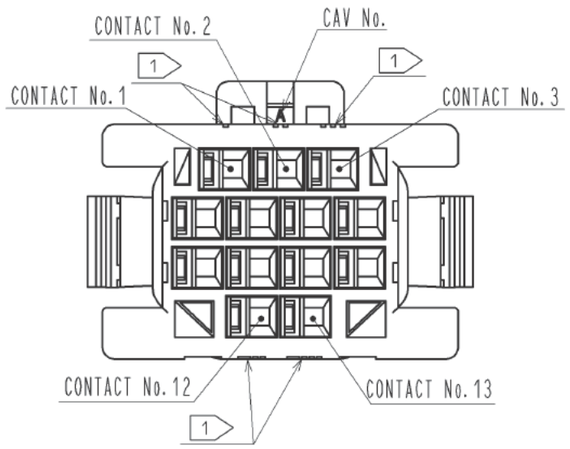

1 FIGURE-1 CONTACT No. MARKING (10:1)

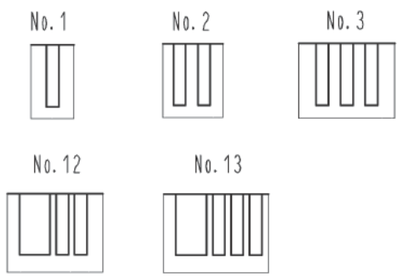

NOTE.
1 MARKINGS AT THE INDICATED POSITIONS ARE CONTACT NO. MARKING. AND SHAPES ARE SHOWN IN FIGURE-1.
2 PLEASE USE THE NON-RADIUS SIDE FOR THE PANEL HOOKING AREA.
3 APPLICABLE PANEL THICKNESSING IS 2.3 TO 0.5mm.
4 CONSULT HIROSE FOR THE OTHER PANEL CUTOUT DESIGNS THAN THE RECOMMENDED ONE.
5. PER PACK : 100 PIECES.
6. THE DIMENSIONS IN PARENTHESIS ARE FOR REFERENCE.
7 THIS FIGURE SHOWS THE MATED CONDITION WITH DF62B-13S-2.2C.

NO.	MATERIAL	FINISH . REMARKS	NO.	MATERIAL	FINISH . REMARKS
			1	PBT	UL94V-0(WHITE)

UNITS mm	SCALE 4 : 1	COUNT	DESCRIPTION OF REVISIONS	DESIGNED	CHECKED	DATE

HRS HIROSE ELECTRIC CO., LTD.

APPROVED	: KI. AKIYAMA	14.03.10	DRAWING NO.	EDC3-349141-01
CHECED	: HK. UMEHARA	14.03.10	PART NO.	DF62P-13EP-2.2C(10)
DESIGNED	: TS. KUMAZAWA	14.03.07	CODE NO.	CL544-0549-8-10
DRAWN	: TS. KUMAZAWA	14.03.07		1/1