KEMET Part Number: PHE850EB5330MB12R17

(F850BM333M300A)

PHE850/F850, Film, Metallized Polypropylene, Safety, 0.033 uF, 20%, 300 VAC (Y2), 1250 VDC, 110°C, Lead Spacing = 15mm

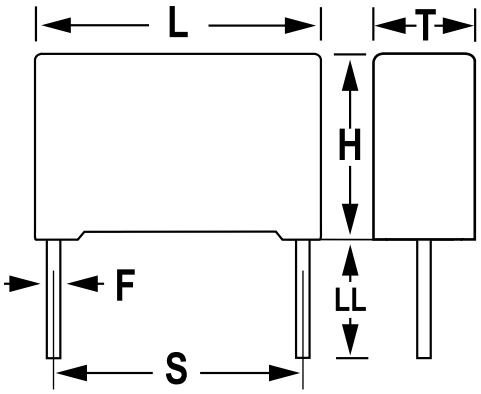

General Information	
Supplier:	KEMET
Series:	PHE850/F850
Dielectric:	Metallized Polypropylene
Style:	Radial
Features:	EMI Safety
RoHS:	Yes
Lead:	Wire Leads
Qualifications:	ENEC, UL, cUL
Notes:	Not For New Design, Please Check Possible Alternative Parts (AltPart)

Dimensions	
L	18mm MAX
H	15mm MAX
T	8mm MAX
S	15mm +/-0.4mm
LL	17mm NOM
F	0.8mm NOM

Packaging Specifications	
Packaging:	Bulk, Bag
Packaging Quantity:	400

Specifications	
Capacitance:	0.033 uF
Capacitance Tolerance:	20%
Voltage AC:	300 VAC (Y2)
Voltage DC:	1250 VDC
Temperature Range:	-55/+110C
Rated Temperature:	110°C
Dissipation Factor:	0.15% 1kHz, 0.20% 10kHz, 0.60% 100kHz
Insulation Resistance:	30 GOhms
Max dV/dt:	100 V/us
Safety Class:	Y2

Statements of suitability for certain applications are based on our knowledge of typical operating conditions for such applications, but are not intended to constitute - and we specifically disclaim - any warranty concerning suitability for a specific customer application or use. This Information is intended for use only by customers who have the requisite experience and capability to determine the correct products for their application. Any technical advice inferred from this Information or otherwise provided by us with reference to the use of our products is given gratis, and we assume no obligation or liability for the advice given or results obtained.

© 2006 - 2019 KEMET