THIS DRAWING IS UNPUBLISHED. RELEASED FOR PUBLICATION
© COPYRIGHT By – ALL RIGHTS RESERVED.

LOC	DIST
CM	00

REVISIONS

P	LTR	DESCRIPTION	DATE	DWN	APVD
	Y2	REVISED PER ECO-11-004587	11MAR11	RK	HMR

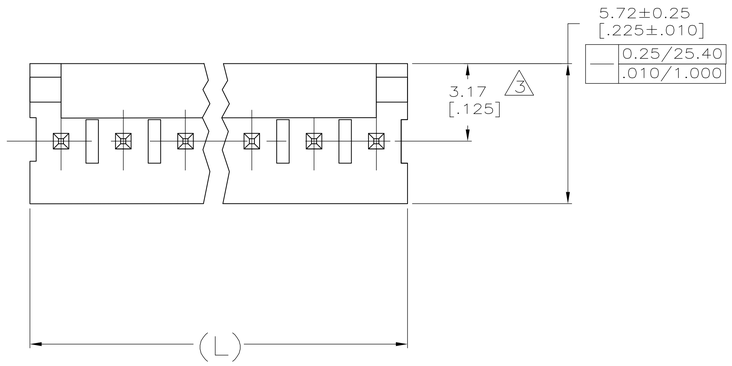

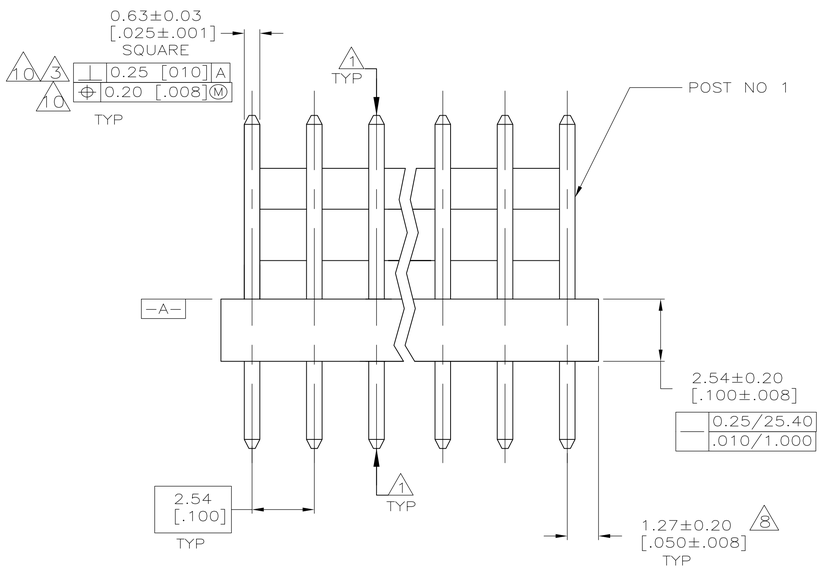

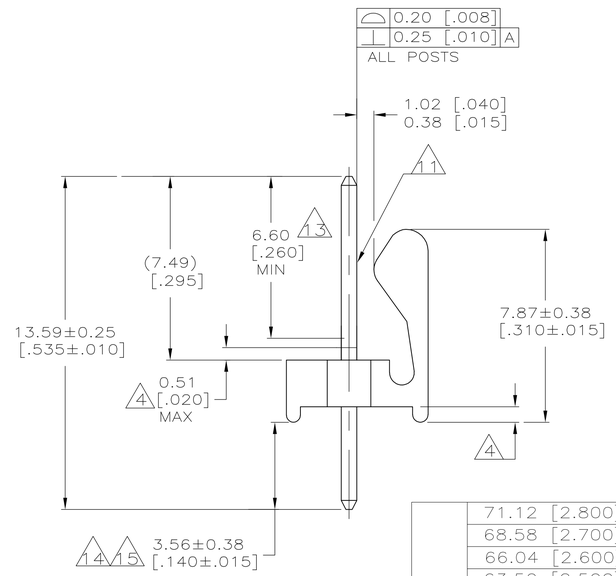

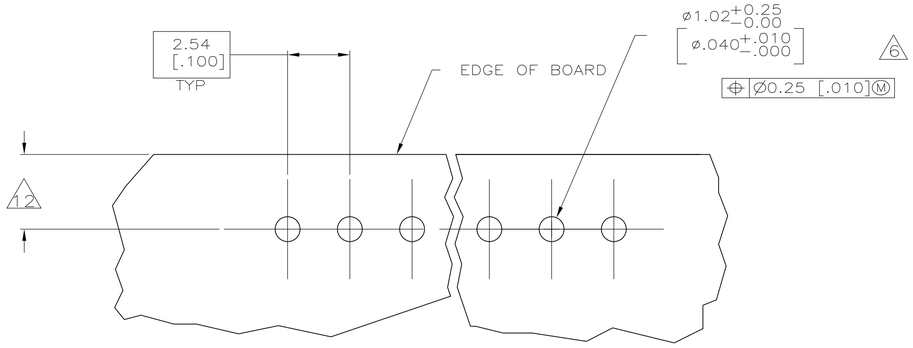

RECOMMENDED MOUNTING HOLE PATTERN
FOR 1.60 [.063] THICK P.C. BOARD 2

1. POST TO WITHSTAND 13 NEWTONS (3 LBS) MINIMUM AXIAL FORCE IN BOTH DIRECTIONS SHOWN WITHOUT DISLODGING.
2. TOLERANCES APPLY TO SOLDER SIDE OF BOARD.
3. MEASURED AT –A–
4. PLASTIC FLASH PERMITTED IN THIS AREA.
5. PARTS COMPLY WITH AMP SOLDERABILITY SPEC. NO. 109–11–2.
6. ONE HOLE MAY BE UNDERSIZED 0.81–0.89 [.032–.035] DIA. FOR ASSEMBLY RETENTION DURING WAVE SOLDERING.
7. MATERIAL: HEADER–THERMOPLASTIC POLYESTER 94V–0 (NATURAL)
   POST–COPPER ALLOY
   FINISH–USE PLATING NOTES 13 & 14 FOR –2 THRU –28 AND NOTES 13 & 15 FOR –32 THRU –58
8. COORDINATE DIMENSION APPLIES FROM CENTER OF ACTUAL FEATURE.
9. PLASTIC BURRS CAUSED BY CUT–OFF TOOLING ARE PERMITTED WITHIN THE MAXIMUM TOLERANCE ENVELOPE.
10. POSTS TO BE MEASURED WHEN STRIP IS HELD FLAT.
11. POST MUST WITHSTAND TWO 90° BENDS AGAINST EXTRUSION WITHOUT BREAKING.
12. DIMENSION SHOULD BE 3.30 [.130] MIN WHEN MATING WITH A MTA–100 CONNECTOR ASSEMBLY OR A CST–100 CONNECTOR ASSEMBLY.
13. PLATING: GOLD PLATE AREA, 0.00038 [.000015] MINIMUM, ALL SIDES, OVER NICKEL UNDERPLATE, 0.00127 [.000050] MINIMUM, ALL SIDES AND ENTIRE LENGTH OF POST.
14. PLATING: BRIGHT TIN/LEAD (93/7) PLATE AREA, 0.00381–0.00889 [.000150–.000350] THICK, ALL FOUR SIDES 3.56 [.140] MINIMUM.
15. PLATING: MATTE TIN PLATE AREA, 0.00381–0.00889 [.000150–.000350] THICK, ALL FOUR SIDES 3.56 [.140] MINIMUM.
16. OBSOLETE PARTS: OBSOLETE CIS STREAMLINING PER D.RENAUD/D.SINISI

LEAD FREE

DIM (L)	NO.OF POSN	ASSEMBLY
71.12 [2.800]	28	5–641126–8
68.58 [2.700]	27	5–641126–7
66.04 [2.600]	26	5–641126–6
63.50 [2.500]	25	5–641126–5
60.96 [2.400]	24	5–641126–4
58.42 [2.300]	23	5–641126–3
55.88 [2.200]	22	5–641126–2
53.34 [2.100]	21	5–641126–1
50.80 [2.000]	20	5–641126–0
48.26 [1.900]	19	4–641126–9
45.72 [1.800]	18	4–641126–8
43.18 [1.700]	17	4–641126–7
40.64 [1.600]	16	4–641126–6
38.10 [1.500]	15	4–641126–5
35.56 [1.400]	14	4–641126–4
33.02 [1.300]	13	4–641126–3
30.48 [1.200]	12	4–641126–2
27.94 [1.100]	11	4–641126–1
25.40 [1.000]	10	4–641126–0
22.86 [.900]	9	3–641126–9
20.32 [.800]	8	3–641126–8
17.78 [.700]	7	3–641126–7
15.24 [.600]	6	3–641126–6
12.70 [.500]	5	3–641126–5
10.16 [.400]	4	3–641126–4
7.62 [.300]	3	3–641126–3
5.08 [.200]	2	3–641126–2

CONTAINS LEAD

DIM (L)	NO.OF POSN	ASSEMBLY	
71.12 [2.800]	28	~~2–641126–8~~	SUPERSEDED BY 5–641126–8 16
68.58 [2.700]	27	~~2–641126–7~~	SUPERSEDED BY 5–641126–7 16
66.04 [2.600]	26	~~2–641126–6~~	SUPERSEDED BY 5–641126–6 16
63.50 [2.500]	25	~~2–641126–5~~	SUPERSEDED BY 5–641126–5 16
60.96 [2.400]	24	2–641126–4	
58.42 [2.300]	23	~~2–641126–3~~	SUPERSEDED BY 5–641126–3 16
55.88 [2.200]	22	~~2–641126–2~~	SUPERSEDED BY 5–641126–2 16
53.34 [2.100]	21	~~2–641126–1~~	SUPERSEDED BY 5–641126–1 16
50.80 [2.000]	20	2–641126–0	
48.26 [1.900]	19	~~1–641126–9~~	SUPERSEDED BY 4–641126–9 16
45.72 [1.800]	18	1–641126–8	
43.18 [1.700]	17	~~1–641126–7~~	SUPERSEDED BY 4–641126–7 16
40.64 [1.600]	16	1–641126–6	
38.10 [1.500]	15	1–641126–5	
35.56 [1.400]	14	1–641126–4	
33.02 [1.300]	13	~~1–641126–3~~	SUPERSEDED BY 4–641126–3 16
30.48 [1.200]	12	1–641126–2	
27.94 [1.100]	11	1–641126–1	
25.40 [1.000]	10	1–641126–0	
22.86 [.900]	9	641126–9	
20.32 [.800]	8	641126–8	
17.78 [.700]	7	641126–7	
15.24 [.600]	6	641126–6	
12.70 [.500]	5	641126–5	
10.16 [.400]	4	641126–4	
7.62 [.300]	3	641126–3	
5.08 [.200]	2	641126–2	

METRIC

THIS DRAWING IS A CONTROLLED DOCUMENT.

DIMENSIONS: mm [INCHES]

TOLERANCES UNLESS OTHERWISE SPECIFIED:
0 PLC ±
1 PLC ±
2 PLC ± 0.13 [.005]
3 PLC ±
4 PLC ±
ANGLES ±

MATERIAL 7 FINISH 7

DWN S. HOOVER 26–JAN–2005
CHK D. BOSSI 26–JAN–2005
APVD D. BOSSI 26–JAN–2005
PRODUCT SPEC
APPLICATION SPEC
WEIGHT
CUSTOMER DRAWING

TE Connectivity

NAME MTA–100 HEADER ASSEMBLY, FRICTION LOCK, NOTCHED, .025 SQUARE STRAIGHT POST, .000015 GOLD PLATED

SIZE	CAGE CODE	DRAWING NO	RESTRICTED TO
A1	00779	C–641126	

SCALE 8:1 SHEET 1 OF 1 REV Y2

4805 (3/11)