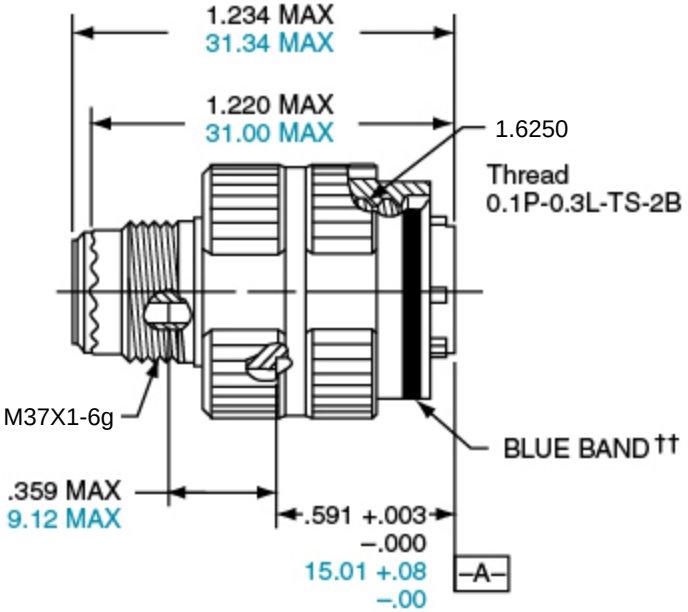

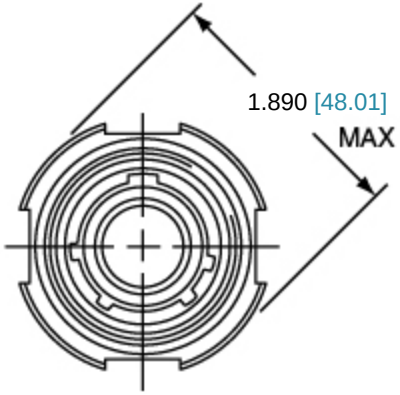

†† Blue band indicates rear release contact retension system

Note: -Drawing not to Scale
-Dimensions subject to change
-Dimensions are in Inches, Millimeters (MM) & Blue color

Property of Amphenol Aerospace.
All rights reserved.

Part No.:

D38999/26KJ19PN

Amphenol Aerospace
40-60 Delaware Avenue
Sidney, NY 13838-1395
800-678-0141
Cage Code: 77820
www.amphenol-aerospace.com

Amphenol Aerospace
40-60 Delaware Avenue
Sidney, NY 13838-1395
Phone: 800-678-0141 - **Fax:** 607-563-5157
Email: info@amphenol-aerospace.com
Website: www.amphenol-aerospace.com

Matthew Mullins
Product Line Manager
Core Products
Phone: 607-563-5673
Email: mmullins@amphenol-aao.com

Specifications

Connector Type	D38999/
Shell Style	Straight Plug
Shell Material	Steel
Shell Finish	Passivated Stainless Steel
Insulation Resistance	5000 megohms min. @500 VDC25C
Operating Temperature [Min]	-65°C
Operating Temperature [Max]	+200°C
Shielding Effectiveness	45dB@10GHz
Durability	500 Hour Salt Spray
Contact Type	P
Contact Description	Pin Contacts

Contacts

Insert Arrangement	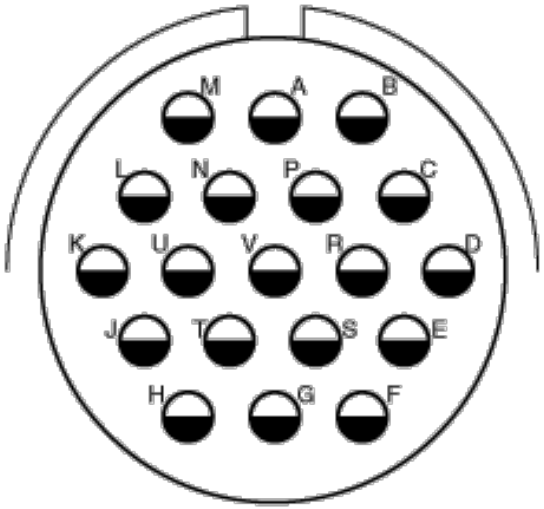
Shell Size	J
Insert Arrg	19
Service Rating	I
Total # Contacts	19
Test Current	23 AMPS
Wire Size for 12	14, 12
Contact Size 12 Number of Contacts	19