Bus coupler - IL MII BK DI8 DO4-PAC - 2884619

Please be informed that the data shown in this PDF Document is generated from our Online Catalog. Please find the complete data in the user's documentation. Our General Terms of Use for Downloads are valid
(http://download.phoenixcontact.com)

Mechatrolink bus coupler, 8 inputs, 24 V DC, 4 outputs, 24 V DC, 500 mA, complete with I/O connectors

Product description

The bus coupler for the Mechatrolink protocol has 4 digital outputs and 8 digital inputs. This package contains all the necessary Inline plugs for connecting the supply and the I/Os.
The Inline terminals can be labeled using pull-out labeling fields. The fields have insert cards that can be labeled individually to suit the application. Additionally, there is the ZBFM-6... Zack marker strip for labeling the terminal points.

Why buy this product

- Meets Mechatrolink II intelligent I/O specification
- Slave address, baud rate, and Mechatrolink data width can be set via DIP switches
- Supports high-speed I/O scanner
- Data transmission speed: 10 Mbps (MII) and 4 Mbps (MI)
- Mechatrolink network connection

Key commercial data

Packing unit	1 pc
GTIN	4 046356 137836
Weight per Piece (excluding packing)	296.0 g
Custom tariff number	85389091
Country of origin	Germany

Technical data

Note:

Utilization restriction	EMC: class A product, see manufacturer's declaration in the download area

Dimensions

Width	80 mm
Height	119.8 mm
Depth	71.5 mm

Bus coupler - IL MII BK DI8 DO4-PAC - 2884619

Technical data

Dimensions

Note on dimensions	Specfications with male connectors

Ambient conditions

Ambient temperature (operation)	0 °C ... 60 °C
Ambient temperature (storage/transport)	-25 °C ... 85 °C
Permissible humidity (operation)	10 % ... 95 % (according to DIN EN 61131-2)
Permissible humidity (storage/transport)	10 % ... 95 % (according to DIN EN 61131-2)
Air pressure (operation)	70 kPa ... 106 kPa (up to 3000 m above sea level)
Air pressure (storage/transport)	70 kPa ... 106 kPa (up to 3000 m above sea level)
Degree of protection	IP20

General

Weight	320 g
Note on weight specifications	with male connectors
Mounting type	DIN rail
Protection class	III, IEC 61140, EN 61140, VDE 0140-1
Conformance with EMC directives	Noise immunity test in accordance with EN 61000-6-2 Electrostatic discharge (ESD) EN 61000-4-2/IEC 61000-4-2 Criterion B; 6 kV contact discharge, 8 kV air discharge
	Noise immunity test in accordance with EN 61000-6-2 Electromagnetic fields EN 61000-4-3/IEC 61000-4-3 Criterion A; Field intensity: 10 V/m
	Noise immunity test in accordance with EN 61000-6-2 Fast transients (burst) EN 61000-4-4/IEC 61000-4-4 Criterion A; all interfaces 1 kVCriterion B; all interfaces 2 kV
	Noise immunity test in accordance with EN 61000-6-2 Transient surge voltage (surge) EN 61000-4-5/IEC 61000-4-5 Criterion B; supply lines DC: 0.5 kV/0.5 kV (symmetrical/asymmetrical); fieldbus cable shield 1 kV
	Noise immunity test in accordance with EN 61000-6-2 Conducted interference EN 61000-4-6/IEC 61000-4-6 Criterion A; Test voltage 10 V
	Noise emission test as per EN 61000-6-4 EN 55011 Class A
Mechanical tests	Vibration resistance in acc. with EN 60068-2-6/IEC 60068-2-6 5 g
	Shock in acc. with EN 60068-2-27/IEC 60068-2-27 Operation: 25 g, 11 ms duration, semi-sinusoidal shock impulse
Diagnostics messages	Short-circuit / overload of the digital outputs Yes
	Sensor supply failure Yes
	Failure of the actuator supply Yes

Interfaces

Fieldbus system	Mechatrolink
Name	Mechatrolink
Connection method	USB type A, socket
Transmission speed	max. 10 MBit/s
Fieldbus system	Lokalbus
Name	Inline local bus
Connection method	Inline data jumper

Bus coupler - IL MII BK DI8 DO4-PAC - 2884619

Technical data

Interfaces

Name	Supply
Connection method	8-pos. Inline connector

System limits of the bus coupler

Number of supported devices	max. 63 (per station)
Number of local bus devices that can be connected	max. 61 (On board I/Os are two devices)
Number of devices with parameter channel	max. 16
Number of branch terminals with remote bus branch	0

Power supply for module electronics

Supply voltage	24 V DC (via Inline plug)
Supply voltage range	19.2 V DC ... 30 V DC (including all tolerances, including ripple)
Supply current	70 mA
Current consumption	max. 0.9 A (from U_{BK})
Communications power U_L	7.5 V DC
Current consumption	0.8 A
Power consumption	typ. 1.7 W

Inline potentials

Communications power U_L	7.5 V DC ±5 %
Power supply at U_L	max. 0.8 A DC
Main circuit supply U_M	24 V DC
Supply voltage range U_M	19.2 V DC ... 30 V DC (including all tolerances, including ripple)
Power supply at U_M	max. 8 A DC (Sum of $U_M + U_S$)
Current consumption from U_M	max. 8 A DC
Segment supply voltage U_S	24 V DC
Supply voltage range U_S	19.2 V DC ... 30 V DC (including all tolerances, including ripple)
Power supply at U_S	max. 8 A DC (Sum of $U_M + U_S$)
Current consumption from U_S	max. 8 A DC
I/O supply voltage U_{ANA}	24 V DC
Supply voltage range U_{ANA}	19.2 V DC ... 30 V DC (including all tolerances, including ripple)
Power supply at U_{ANA}	max. 0.5 A DC

Digital inputs

Input name	Digital inputs
Connection method	Inline plugs
	2, 3-wire
Number of inputs	8 (EN 61131-2 type 1)
Typical response time	approx. 500 µs
Protective circuit	Protection against polarity reversal Suppressor diode
Input voltage	24 V DC
Input voltage range "1" signal	15 V DC ... 30 V DC

Bus coupler - IL MII BK DI8 DO4-PAC - 2884619

Technical data

Digital inputs

Typical input current per channel	typ. 3 mA

Digital outputs

Output name	Digital outputs
Connection method	Inline plugs
	2, 3-wire
Number of outputs	4
Protective circuit	Short-circuit and overload protection Free running circuit
Output voltage	24 V DC -1 V (At nominal current)
Nominal output voltage	24 V DC
Maximum output current per channel	500 mA
Maximum output current per module / terminal block	2 A
Maximum output current per module	4 A
Nominal load, inductive	12 VA
Nominal load, lamp	12 W
Nominal load, ohmic	12 W

Classifications

eCl@ss

eCl@ss 4.0	27250203
eCl@ss 4.1	27250203
eCl@ss 5.0	27250203
eCl@ss 5.1	27242608
eCl@ss 6.0	27242608
eCl@ss 7.0	27242608
eCl@ss 8.0	27242608

ETIM

ETIM 2.0	EC001434
ETIM 3.0	EC001604
ETIM 4.0	EC001604
ETIM 5.0	EC001604

UNSPSC

UNSPSC 6.01	43172015
UNSPSC 7.0901	43201404
UNSPSC 11	43172015
UNSPSC 12.01	43201404
UNSPSC 13.2	43201404

Bus coupler - IL MII BK DI8 DO4-PAC - 2884619

Approvals

Approvals

Approvals

UL Recognized / cUL Recognized / UL Recognized / cUL Recognized / cULus Recognized

Ex Approvals

UL Listed / cUL Listed / UL Listed / cUL Listed / cULus Listed

Approvals submitted

Approval details

UL Recognized

cUL Recognized

UL Recognized

cUL Recognized

cULus Recognized

Accessories

Accessories

Connector set

Bus coupler - IL MII BK DI8 DO4-PAC - 2884619

Accessories

Connector set - IL BKDIO-PLSET - 2878599

Connector set, for Inline bus coupler with I/Os mounted in rows

---

End block

End clamp - CLIPFIX 35 - 3022218

Quick mounting end clamp for NS 35/7,5 DIN rail or NS 35/15 DIN rail, with marking option, width: 9.5 mm, color: gray

---

Labeling panel

Labeling field - IB IL FIELD 8 - 2727515

Labeling field, width: 48.8 mm

Labeling field - IB IL FIELD 2 - 2727501

Labeling field, width: 12.2 mm

Terminal marking

Insert strip - ESL 62X46 - 0809502

Insert strip, Sheet, white, Unlabeled, Can be labeled with: Office printing systems, Plotter: Laser printer, Mounting type: Insert, Lettering field: 62 x 46 mm

---

Bus coupler - IL MII BK DI8 DO4-PAC - 2884619

Accessories

Insert strip - ESL 62X10 - 0809492

Insert strip, Sheet, white, Unlabeled, Can be labeled with: Office printing systems, Plotter: Laser printer, Mounting type: Insert, Lettering field: 62 x 10 mm

Drawings

Connection diagram

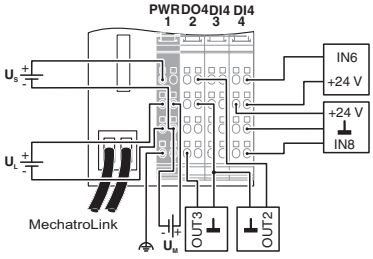

Dimensioned drawing

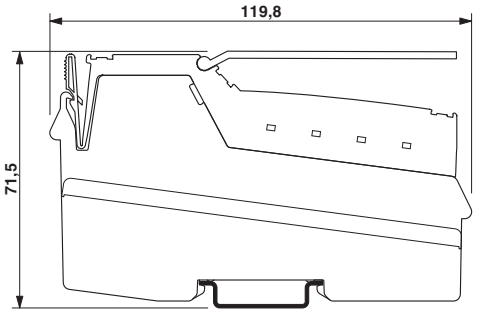

Phoenix Contact 2014 © - all rights reserved
http://www.phoenixcontact.com