KEMET Part Number: L0402C3N6SRMST

KEMET, L-RMS, RF, 3600 pH, +/-0.3 nH

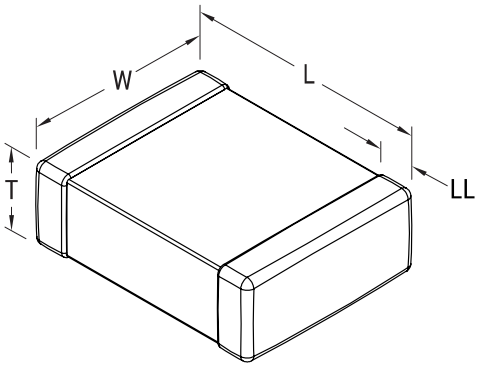

General Information	
Series:	L-RMS
Style:	SMD Chip
Description:	Surface Mount Inductor
RoHS:	Yes
Core:	Ceramic
Winding Type:	Multilayer

Specifications	
Inductance:	0.0036 uH (100 MHz)
Inductance Tolerance:	+/-0.3 nH
Temperature Range:	-55/+125C
Current:	300 mAmps (MAX)
DC Resistance:	0.2 Ohms
Quality Factor:	10 at 100 MHz, 24 at 500 MHz, 31 at 800 MHz, 35 at 1000 MHz
Self-Resonant Frequency:	5000 MHz

Dimensions	
Chip Size	0402
L	1mm +/-0.05mm
W	0.5mm +/-0.05mm
T	0.5mm +/-0.05mm
LL	0.25mm +/-0.1mm

Packaging Specifications	
Packaging:	T&R
Packaging Quantity:	10000

Statements of suitability for certain applications are based on our knowledge of typical operating conditions for such applications, but are not intended to constitute - and we specifically disclaim - any warranty concerning suitability for a specific customer application or use. This Information is intended for use only by customers who have the requisite experience and capability to determine the correct products for their application. Any technical advice inferred from this Information or otherwise provided by us with reference to the use of our products is given gratis, and we assume no obligation or liability for the advice given or results obtained.

© 2006 - 2019 KEMET