This document was generated on 10/03/2014

PLEASE CHECK WWW.MOLEX.COM FOR LATEST PART INFORMATION

Part Number: 46235-5001

Status: Active

Overview: Micro-Fit 3.0™ Connectors

Description: Micro-Fit RMF™ High Mating Cycle, Reduced Mating Force, Crimp Terminal, Female, with 0.38µm Selective Gold (Au) over Nickel (Ni), 20-24 AWG, with Lubricant

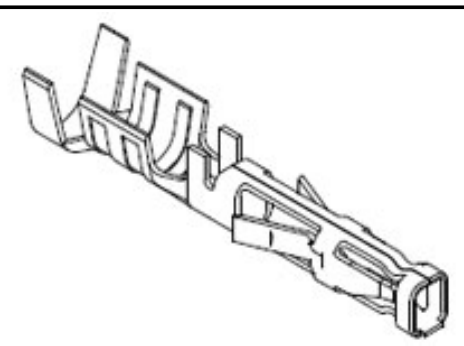

Series

image - Reference only

Documents:

Drawing (PDF)
Product Specification PS-46235-001 (PDF)
Test Summary TS-46235-001 (PDF)
Test Summary TS-46235-501 (PDF)
RoHS Certificate of Compliance (PDF)
Product Literature (PDF)

General

Product Family	Crimp Terminals
Series	46235
Application	Power
Comments	90% increase in mating cycles (250 cycles) and up to 50% reduction in mating force
Crimp Quality Equipment	Yes
Overview	Micro-Fit 3.0™ Connectors
Product Literature Order No	987650-5984
Product Name	Micro-Fit RMF™
UPC	883906382377

Physical

Durability (mating cycles max)	250
Gender	Female
Material - Metal	Copper-Zinc-Tin
Material - Plating Mating	Gold
Material - Plating Termination	Nickel
Net Weight	0.046/g
Packaging Type	Reel
Plating min - Mating	0.381µm
Plating min - Termination	1.270µm
Termination Interface: Style	Crimp or Compression
Wire Insulation Diameter	1.85mm max.
Wire Size AWG	20, 22, 24
Wire Size mm²	N/A

Electrical

Current - Maximum per Contact	5A

Material Info

Reference - Drawing Numbers

Product Specification	PS-46235-001
Sales Drawing	SD-46235-001
Test Summary	TS-46235-001, TS-46235-501

EU RoHS
ELV and RoHS Compliant
REACH SVHC
Contains SVHC: No
Low-Halogen Status
Low-Halogen

China RoHS

Need more information on product environmental compliance?

Email productcompliance@molex.com
For a multiple part number RoHS Certificate of Compliance, click here

Please visit the Contact Us section for any non-product compliance questions.

Search Parts in this Series
46235Series

Mates With
43031 Micro-Fit 3.0™ Male Crimp Terminals

Use With
43025 , 43645 Micro-Fit 3.0™ Receptacle Housings, 44133 Micro-Fit BMI™ Panel Mount Receptacle Housings

Application Tooling | **FAQ**

Tooling specifications and manuals are found by selecting the products below. Crimp Height Specifications are then contained in the Application Tooling Specification document.

Global

Description	Product #
Hand Crimp Tool for Low Force Crimp Terminals	0638192900
FineAdjust™ Applicator for	0639001400

Low Force Crimp Terminals, 20-24 AWG Wire	
T2 Terminator	0639101400
Tooling to be used with Low Force Crimp Terminals, 20-24 AWG Wire	
Extraction Tool	0011030043

This document was generated on 10/03/2014

PLEASE CHECK WWW.MOLEX.COM FOR LATEST PART INFORMATION