DIP Switches

Technical Information

Cautions

Use the DIP Switch within the rated voltage and current ranges, otherwise the DIP Switch may have a shortened life expectancy, radiate heat, or burn out. This particularly applies to the instantaneous voltages and currents when switching.

Correct Use

■ Circuit Design

Although the minimum current is 10 μA (3.5 VDC), contact reliability may need to be improved in some cases. This is particularly true when switching causes an increase in instantaneous current, such as in C-MOS IC applications. Do not let the peak current exceed the rated value here or any other time.

Only BCD/hexadecimal 1-2-4-8 code is available for A6C/A6CV/A6R/A6RV models. If BCD/hexadecimal 1-2-4-8 complement code is required, make the appropriate provisions in the circuit.

■ Mounting

Normally the default striker setting is OFF for slide-type DIP Switches and the default rotor setting is 0 for Rotary DIP Switches. Do not change these settings when mounting, soldering, washing or drying Switches. In rare cases, the striker may be deformed by heat generated during soldering.

Automatic Insertion Machine

Use a body stopper system for the chute stopper of automatic insertion machines. When mounting Switches using an insertion machine incorporating a half-lead stopper, make sure the machine will not deform the terminals of the Switch, or improper insertion may result. Check actual mounting conditions prior to using a half-lead stopper system.

A printed circuit board that is 1.2 to 1.6 mm thick is recommended.

Holes on the PCB should be at least 0.9 mm in diameter for automatic insertion.

Manual or IC Socket Insertion

Commercially available insertion tools are recommended for mounting ICs on PCBs.

Terminal pitch, dimensions and other features are identical to that of standard ICs for IC socket compatibility (except for the A6H and A6S).

Align the terminals so they slide in simultaneously when the Switch is inserted into socket holes or into mounting holes pre-drilled at the specified dimensions. Apply downward force on the Switch until the terminals are properly seated on the PCB.

Do not try to remove a Switch by inserting a screwdriver between it and the PCB, and then twisting the screwdriver to peel the Switch off. Use a commercially available inserter/remover to remove the Switch.

■ Soldering

Observe the following conditions when soldering the DIP Switch.

General Precautions for Soldering

Set the pins to OFF before soldering an A6ER DIP Switch.

Before soldering the Switch on a PCB, make sure there is no unnecessary space between the Switch and the PCB.

Before soldering the Switch on a multilayer PCB, conduct a test to make sure the Switch will not be deformed by soldering heat on the pattern or land of the multilayer PCB.

Automatic Soldering Bath (Except A6S/A6H)

Soldering temperature: 260°C max.
Soldering time: 5 s max. for a 1.6-mm thick, single-side PCB

Do not use an automatic soldering bath or manual soldering for A6S or A6H models.

Confirm in advance that flux will not bubble up onto the side of the PCB to which the Switch is mounted. Depending on the type of Switch, the flux may have an adverse effect if it enters the Switch.

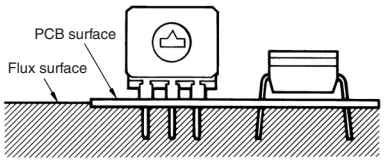

The A6S and A6H are designed specifically for reflow soldering. Do not use an automatic soldering bath or manual soldering for these models.

Reflow Soldering

Observe the following conditions for reflow soldering the A6S and A6H models.

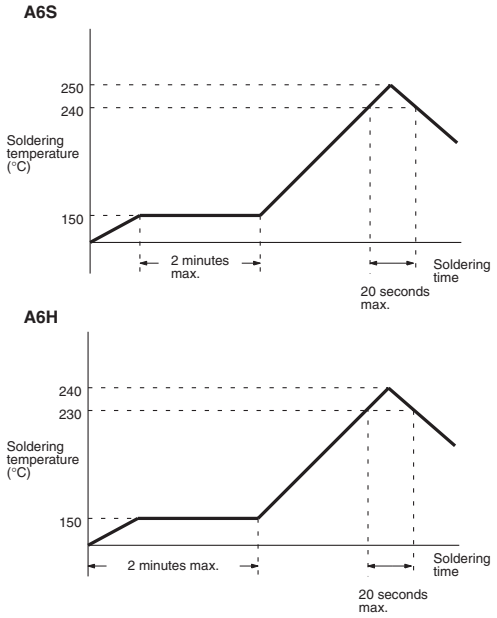

Do not use reflow soldering for any models other than the A6S and A6H. Otherwise the plastic case may melt or deform.

The soldering conditions and the temperature around the Switch may vary with the type of reflow bath. Check the temperature profile and confirm soldering conditions as well as the amount of heat applied to the Switch prior to soldering.

Manual Soldering (Except A6S/A6H)

Soldering temperature: 350°C at the tip of the soldering iron.
Soldering time: 3 s max. for a 1.6-mm thick, single-side PCB

Do not solder the Switch more than twice including any rectification soldering. An interval of five minutes is required between the first and second soldering.

■ Washing

Washable and Non-washable Models

The models for which washing are possible are shown in the following table.

Washable	A6A, A6C, A6CV, A6D, A6DR, A6T (with seal tape), A6S (with seal tape), A6H (with seal tape)
Non-washable	A6R, A6RV, A6T (standard/raised actuator), A6S (standard/raised actuator), A6E, A6ER

Washing Procedure

Ultrasonic cleaning is not available for slide-type DIP Switches with seal tape. These models may be wiped or dipped into washing agents for one minute maximum.

Slide-type DIP Switches with seal tape can be washed as long as the seal tape is not removed or pasted before washing. Non-compliance here will cause the quality of the seal to decline.

Washing equipment incorporating more than one washing bath can be used to clean washable models, provided that the washable models are cleaned for one minute maximum per bath and the total cleaning time does not exceed three minutes.

Washing Agents

Apply alcohol-based solvents to clean washable models. Do not apply water or any other agents to clean any washable models, as such agents may degrade the materials or performance of the Switch.

Washing Precautions

Do not impose any external force on washable models while washing.

Do not clean washable models immediately after soldering. The cleaning agent may be absorbed into the incomplete seal through respiration as the Switch cools. Wait for at least three minutes after soldering before cleaning.

Do not use washable Switches submerged in water or in locations exposed to water.

■ Handling

Slide-type DIP Switch operation

Do not apply excessive operating force to the Switch. Otherwise the Switch may be damaged or deformed, and the switch mechanism may malfunction as a result. Apply an operating force not exceeding 200% of the maximum rated operating force to the Switch.

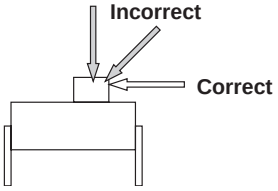

Set slide-type DIP Switches with a tiny, rounded object, such as the tip of a ball-point pen or a small screwdriver. Do not set the DIP Switch using tweezers or any other sharp object that may damage it.

Do not set the DIP Switch using the point of a mechanical pencil, or lead powder or fragments may fall into the Switch and internal circuit board, causing the DIP Switch to malfunction and reducing the dielectric strength of the circuit board.

Although raised-type (A6B standard type) and piano-type strikers can be operated by fingertip, do not push too hard or too fast because this will deform or damage the striker.

Rotary DIP Switch Operation

Set rotary-type DIP Switches with a flat-blade screwdriver that fits into the screwdriver groove. Using a screwdriver of inappropriate dimensions, or using a tool other than a flat-blade screwdriver may cause damage to the groove that may make the Switch impossible to operate.

Insert the flat-blade screwdriver vertically to operate the Switch. The Switch may be damaged if the screwdriver is inserted at an angle.

Do not use excessive force to operate the Switch, or it may damage or deform the Switch

Item	A6R/A6RV	A6A		A6C/A6CV
	Top/Side operation, flat type	Standard type, flat type	Shaft type, wheel type	Top/Side operation type
Screwdriver groove	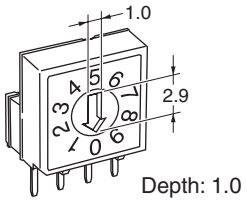	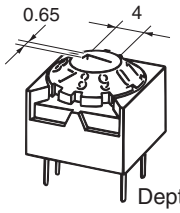	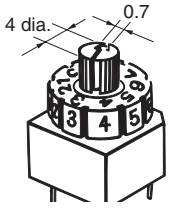	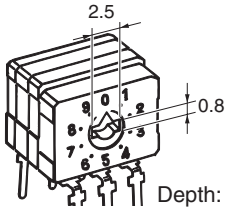
Applicable screwdriver: A	1.8 to 2.1	3.5 to 3.8		2.0 to 2.4
Applicable screwdriver: B	0.7 to 0.8	0.4 to 0.5		0.5 to 0.6
Part names	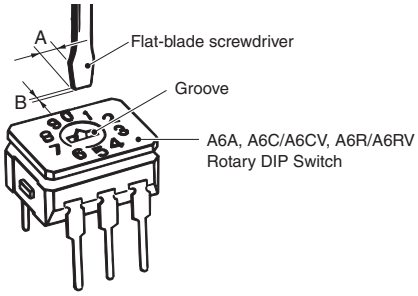			

Note: All units are in millimeters unless otherwise indicated.

Packing Specifications

A6S models with embossed taping specifications are shown below.

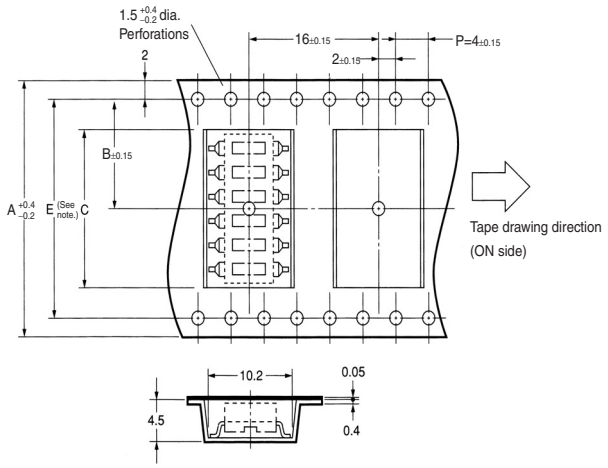

Note: The perforations along both sides are for 8-pole Switches only. The perforations on the bottom of the diagram are not for 4- and 6-pole Switches.

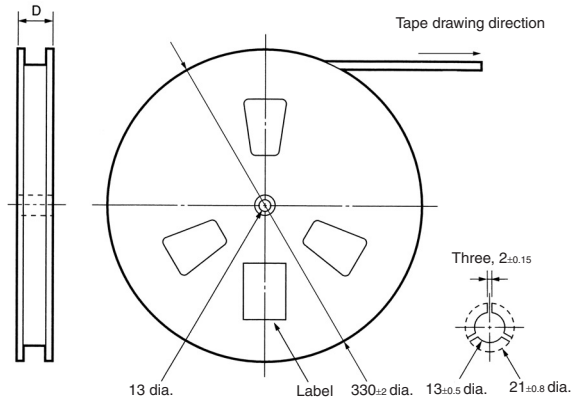

Applicable models	A6S-□102-P
Standard	Conforms to JEITA.
Package quantity	900 per reel

No. of poles	4	6	8
A +0.4 −0.2	24	24	32
B±0.15	11.5	11.5	14.2
C	11.6	16.7	21.7
D	(30)	(30)	(38)
E	---	---	28.4

A6H models with embossed taping specifications are shown below.

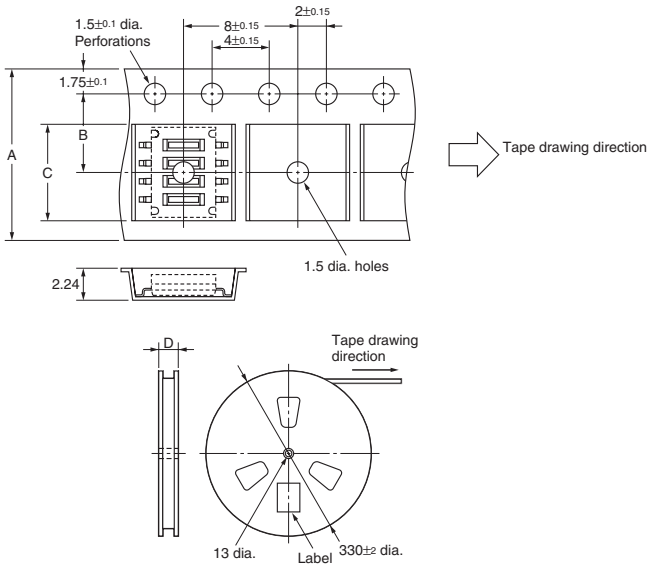

Applicable models	A6H-□102-P
Standard	Conforms to JEITA.
Package quantity	4,000 per reel

No. of poles	4	6	8	10
A +0.3 −0.1	12	24	24	24
B±0.15	5.5	11.5	11.5	11.5
C	(6.6)	(11.7)	(11.7)	(14.4)
D	(18)	(30)	(30)	(30)

OMRON

Terms and Conditions of Sale

1. Offer; Acceptance. These terms and conditions (these "Terms") are deemed part of all quotations, acknowledgments, invoices, purchase orders and other documents, whether electronic or in writing, relating to the sale of products or services (collectively, the "Products") by Omron Electronic Components LLC ("Seller"). Seller hereby objects to any terms or conditions proposed in Buyer's purchase order or other documents which are inconsistent with, or in addition to, these Terms.
2. Prices; Payment. All prices stated are current, subject to change without notice by Seller. Buyer agrees to pay the price in effect at time of shipment. Payments for Products received are due net 30 days unless otherwise stated in the invoice.
3. Discounts. Cash discounts, if any, will apply only on the net amount of invoices sent to Buyer after deducting transportation charges, taxes and duties, and will be allowed only if (i) the invoice is paid according to Seller's payment terms and (ii) Buyer has no past due amounts owing to Seller.
4. Currencies. If the prices quoted herein are in a currency other than U.S. dollars, Buyer shall make remittance to Seller at the then current exchange rate most favorable to Seller and which is available on the due date; provided that if remittance is not made when due, Buyer will convert the amount to U.S. dollars at the then current exchange rate most favorable to Seller available during the period between the due date and the date remittance is actually made.
5. Governmental Approvals. Buyer shall be responsible for, and shall bear all costs involved in, obtaining any government approvals required for the importation or sale of the Products.
6. Taxes. All taxes, duties and other governmental charges (other than general real property and income taxes), including any interest or penalties thereon, imposed directly or indirectly on Seller or required to be collected directly or indirectly by Seller for the manufacture, production, sale, delivery, importation, consumption or use of the Products sold hereunder (including customs duties and sales, excise, use, turnover and license taxes) shall be charged to and remitted by Buyer to Seller.
7. Financial. If the financial position of Buyer at any time becomes unsatisfactory to Seller, Seller reserves the right to stop shipments or require satisfactory security or payment in advance. If Buyer fails to make payment or otherwise comply with these Terms or any related agreement, Seller may (without liability and in addition to other remedies) cancel any unshipped portion of Products sold hereunder and stop any Products in transit until Buyer pays all amounts, including amounts payable hereunder, whether or not then due, which are owing to it by Buyer. Buyer shall in any event remain liable for all unpaid accounts.
8. Cancellation; Etc. Orders are not subject to rescheduling or cancellation unless Buyer indemnifies Seller fully against all costs or expenses arising in connection therewith.
9. Force Majeure. Seller shall not be liable for any delay or failure in delivery resulting from causes beyond its control, including earthquakes, fires, floods, strikes or other labor disputes, shortage of labor or materials, accidents to machinery, acts of sabotage, riots, delay in or lack of transportation or the requirements of any government authority.
10. Shipping; Delivery. Unless otherwise expressly agreed in writing by Seller:
    1. Shipments shall be by a carrier selected by Seller;
    2. Such carrier shall act as the agent of Buyer and delivery to such carrier shall constitute delivery to Buyer;
    3. All sales and shipments of Products shall be FOB shipping point (unless otherwise stated in writing by Seller), at which point title to and all risk of loss of the Products shall pass from Seller to Buyer, provided that Seller shall retain a security interest in the Products until the full purchase price is paid by Buyer;
    4. Delivery and shipping dates are estimates only.
    5. Seller will package Products as it deems proper for protection against normal handling and extra charges apply to special conditions.
11. Claims. Any claim by Buyer against Seller for shortage or damage to the Products occurring before delivery to the carrier must be presented in writing to Seller within 30 days of receipt of shipment and include the original transportation bill signed by the carrier noting that the carrier received the Products from Seller in the condition claimed.
12. Warranties. (a) Exclusive Warranty. Seller's exclusive warranty is that the Products will be free from defects in materials and workmanship for a period of twelve months from the date of sale by Seller (or such other period expressed in writing by Seller). Seller disclaims all other warranties, express or implied. (b) Limitations. SELLER MAKES NO WARRANTY OR REPRESENTATION, EXPRESS OR IMPLIED, ABOUT NON-INFRINGEMENT, MERCHANTABILITY OR FITNESS FOR A PARTICULAR PURPOSE OF THE PRODUCTS. BUYER ACKNOWLEDGES THAT IT ALONE HAS DETERMINED THAT THE PRODUCTS WILL SUITABLY MEET THE REQUIREMENTS OF THEIR INTENDED USE. Seller further disclaims all warranties and responsibility of any type for claims or expenses based on infringement by the Products or otherwise of any intellectual property right. (c) Buyer Remedy. Seller's sole obligation hereunder shall be to replace (in the form originally shipped with Buyer responsible for labor charges for removal or replacement thereof) the non-complying Product or, at Seller's election, to repay or credit Buyer an amount equal to the purchase price of the Product; provided that in no event shall Seller be responsible for warranty, repair, indemnity or any other claims or expenses regarding the Products unless Seller's analysis confirms that the Products were properly handled, stored, installed and maintained and not subject to contamination, abuse, misuse or inappropriate modification. Return of any Products by Buyer must be approved in writing by Seller before shipment. Seller shall not be liable for the suitability or unsuitability or the results from the use of Products in combination with any electrical or electronic components, circuits, system assemblies, or any other materials or substances or environments. Any advice, recommendations or information given orally or in writing are not to be construed as an amendment or addition to the above warranty.
13. Limitation on Liability; Etc. SELLER SHALL NOT BE LIABLE FOR SPECIAL, INDIRECT, INCIDENTAL OR CONSEQUENTIAL DAMAGES, LOSS OF PROFITS OR PRODUCTION OR COMMERCIAL LOSS IN ANY WAY CONNECTED WITH THE PRODUCTS, WHETHER SUCH CLAIM IS BASED IN CONTRACT, WARRANTY, NEGLIGENCE OR STRICT LIABILITY. Further, in no event shall liability of Seller exceed the individual price of the Product on which liability is asserted.
14. Indemnities. Buyer shall indemnify and hold harmless Seller, its affiliates and its employees from and against all liabilities, losses, claims, costs and expenses (including attorney's fees and expenses) related to any claim, investigation, litigation or proceeding (whether or not Seller is a party) which arises or is alleged to arise from Buyer's acts or omissions under these Terms or in any way with respect to the Products. Without limiting the foregoing, Buyer (at its own expense) shall indemnify and hold harmless Seller and defend or settle any action brought against Seller to the extent that it is based on a claim that any Product made to Buyer specifications infringed intellectual property rights of another party.
15. Property; Confidentiality. The intellectual property embodied in the Products is the exclusive property of Seller and its affiliates and Buyer shall not attempt to duplicate it in any way without the written permission of Seller. Notwithstanding any charges to Buyer for engineering or tooling, all engineering and tooling shall remain the exclusive property of Seller. All information and materials supplied by Seller to Buyer relating to the Products are confidential and proprietary, and Buyer shall limit distribution thereof to its trusted employees and strictly prevent disclosure to any third party.
16. Miscellaneous. (a) Waiver. No failure or delay by Seller in exercising any right and no course of dealing between Buyer and Seller shall operate as a waiver of rights by Seller. (b) Assignment. Buyer may not assign its rights hereunder without Seller's written consent. (c) Law. These Terms are governed by Illinois law (without regard to conflict of law principles). Federal and state courts in Illinois shall have exclusive jurisdiction for any dispute hereunder. (d) Amendment. These Terms constitute the entire agreement between Buyer and Seller relating to the Products, and no provision may be changed or waived unless in writing signed by the parties. (e) Severability. If any provision hereof is rendered ineffective or invalid, such provision shall not invalidate any other provision. (f) Setoff. Buyer shall have no right to set off any amounts against the amount owing in respect of this invoice.. (g) Definitions. As used herein, "including" means "including without limitation".

Certain Precautions on Specifications and Use

1. Suitability for Use. Seller shall not be responsible for conformity with any standards, codes or regulations which apply to the combination of the Product in Buyer's application or use of the Product. At Buyer's request, Seller will provide applicable third party certification documents identifying ratings and limitations of use which apply to the Product. This information by itself is not sufficient for a complete determination of the suitability of the Product in combination with the end product, machine, system, or other application or use. Buyer shall be solely responsible for determining appropriateness of the particular Product with respect to Buyer's application, product or system. Buyer shall take application responsibility in all cases but the following is a non-exhaustive list of applications for which particular attention must be given:
   (i) Outdoor use, uses involving potential chemical contamination or electrical interference, or conditions or uses not described in this document.
   (ii) Energy control systems, combustion systems, railroad systems, aviation systems, medical equipment, amusement machines, vehicles, safety equipment, and installations subject to separate industry or government regulations.
   (iii) Use in consumer products or any use in significant quantities.
   (iv) Systems, machines and equipment that could present a risk to life or property. Please know and observe all prohibitions of use applicable to this product.

   NEVER USE THE PRODUCT FOR AN APPLICATION INVOLVING SERIOUS RISK TO LIFE OR PROPERTY WITHOUT ENSURING THAT THE SYSTEM AS A WHOLE HAS BEEN DESIGNED TO ADDRESS THE RISKS, AND THAT THE OMRON PRODUCT IS PROPERLY RATED AND INSTALLED FOR THE INTENDED USE WITHIN THE OVERALL EQUIPMENT OR SYSTEM.
2. Programmable Products. Seller shall not be responsible for the user's programming of a programmable product, or any consequence thereof.
3. Performance Data. Performance data given in this publication is provided as a guide for the user in determining suitability and does not constitute a warranty It may represent the result of Seller's test conditions, and the users must correlate it to actual application requirements. Actual performance is subject to Seller's Warranty and Limitations of Liability.
4. Change in Specifications. Product specifications and accessories may be changed at any time based on improvements and other reasons. It is our practice to change part numbers when published ratings or features are changed or when significant construction changes are made. However, some specifications of the Product may be changed without any notice. When in doubt, special part numbers may be assigned to fix or establish key specifications for your application. Please consult with your Seller representative at any time to confirm actual specifications of purchased Product.
5. Errors and Omissions. The information in this publication has been carefully checked and is believed to be accurate; however, no responsibility is assumed for clerical, typographical or proofreading errors, or omissions.
6. RoHS Compliance. Where indicated, our products currently comply, to the best of our knowledge as of the date of this publication, with the requirements of the European Union's Directive on the Restriction of certain Hazardous Substances ("RoHS"), although the requirements of RoHS do not take effect until July 2006. These requirements may be subject to change. Please consult our website for current information.

Complete "Terms and Conditions of Sale" for product purchase and use are on Omron's website at www.components.omron.com – under the "About Us" tab, in the Legal Matters section.

ALL DIMENSIONS SHOWN ARE IN MILLIMETERS.
To convert millimeters into inches, multiply by 0.03937. To convert grams into ounces, multiply by 0.03527.

OMRON

OMRON ELECTRONIC COMPONENTS LLC
55 E. Commerce Drive, Suite B
Schaumburg, IL 60173
847-882-2288

OMRON CANADA, INC.
885 Milner Avenue
Toronto, Ontario M1B 5V8
416-286-6465

OMRON ON-LINE
Global - http://www.omron.com
USA - http://www.components.omron.com
Canada - http://www.omron.ca

Cat. No. JB301-E3-01 3/05 Specifications subject to change without notice Printed in USA